GX-R55

AKAI SERVICE MANUAL

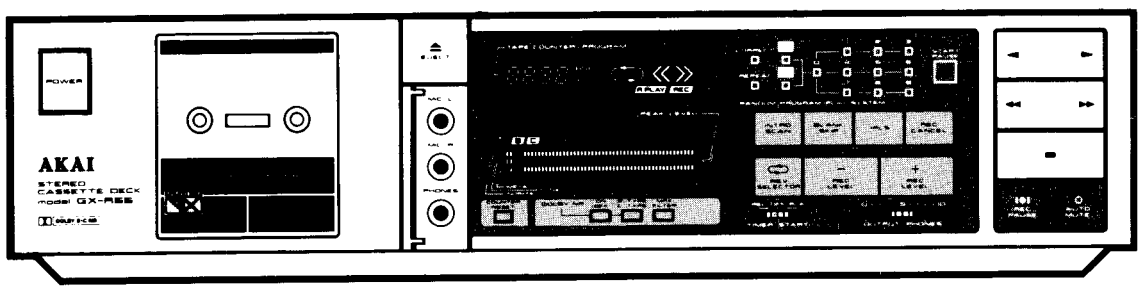

STEREO CASSETTE DECK

MODEL **GX-R55**

ABBREVIATIONS FOR SERVICE MANUAL
MODEL GX-R55

ABBREVIATIONS	EXPLANATION
AC	Alternating Current
ADJ	ADJustment
BSP	Blank Skip Play
DC	Direct Current
EQ	EQualizer
FF (operation)	Fast Forward
FF (logic)	Flip Flop
FLD	FLuorescent Display
FREQ	FREQuency
FWD	ForWarD
INH	INHibit
IPLS	Instant Program Locating System
MPX	Multi PleX
NR	Noise Reduction
PB	Play Back
REC	RECord
REV	REVerse
REW	REWind
SENS	SENSitivity
VR	Variable Resistor
V. REG	Voltage REGulator

HANDBUCH

veröffentlicht
tsch enthält,
sammen mit der
len Stromlauf-

.. 0,65% (Reineisenband)
0,55% (Reineisenband)
0,25% (CrO_2)
0,15% (Normal)
.. LINE: 410mV/47kOhm
LINE: 410mV/ 1 kOhm
.. 100V, 50/60Hz für Japan
120V, 60Hz für USA und Canada
220V, 50Hz für Europa außer GB
240V, 50Hz für GB und Australien
110V/120V/220V/240V, 50/60 Hz umschaltbar für andere Länder
.. 440(B) x 105(H) x 288(T) mm
.. 5,0kg

chen Daten und Design zwecks
en.
gs-System wird unter Lizenz von
ensing Corporation gefertigt.
-D-Zeichen sind Warenzeichen
Licensing Corporation.
chen von dbx Incorporated.

VI. ZUR TONKOPFEINSTELLUNG

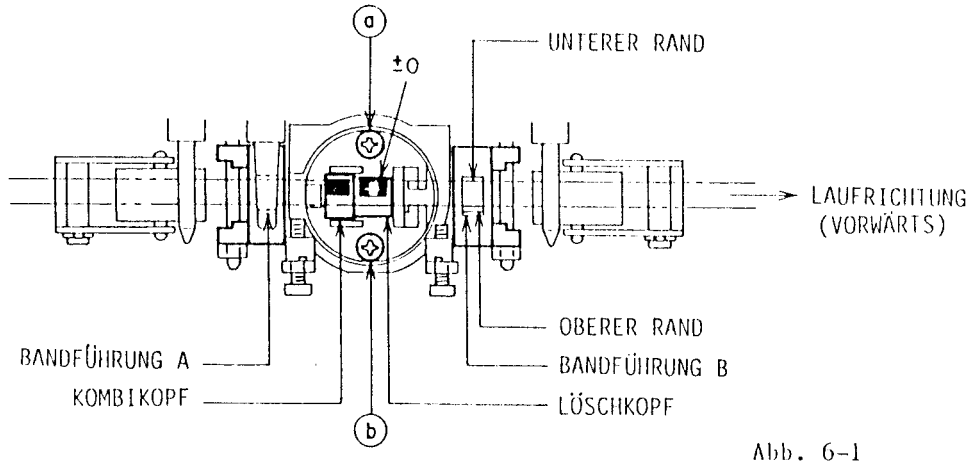

Abb. 6-1

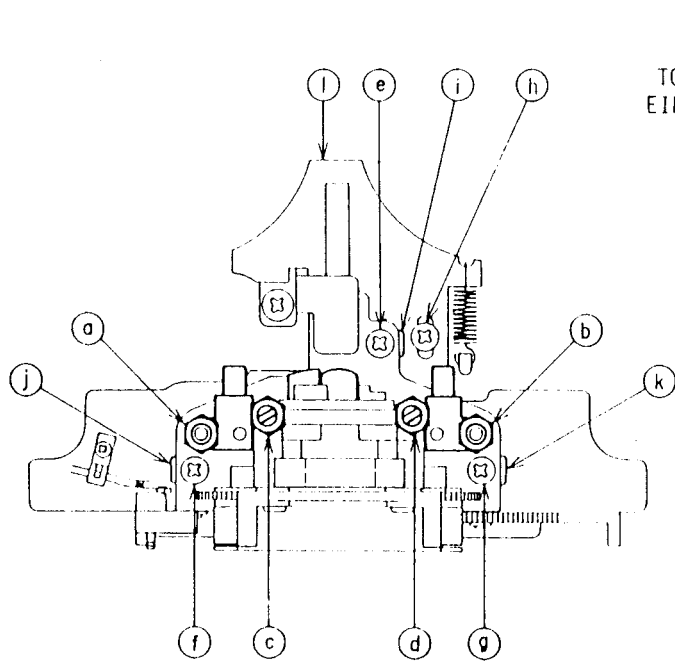

Abb. 6-2

Abb. 6-3 Tonkopfvorsprung-Messgerät
(TF-111CJ)

Abb. 6-4 Spiegelcassette
(MC-112C)

6-1 BANDFÜHRUNGS-EINSTELLUNG (Siehe Abbildung 6-1 und 6-4)

1) Wie in Abbildung 6-3 gezeigt, eine Spiegelkassette (AT-751178) verwenden, um den Tonkopfbereich besser einsehen zu können und das Gerät auf Wiedergabe schalten.

2) Die Bandführungen Ⓐ + Ⓑ sind mit Hilfe der beiden Einstellmuttern ⓐ + ⓑ, wie in Abb. 6-2 gezeigt, so einzustellen, daß das Band glatt über den unteren Rand beider Bandführungen läuft und keinerlei Verformungen aufweist.

6-2 KOMBIKOPF-AZIMUTH-EINSTELLUNG

Eine 10kHz-Tonkopf-Azimuth-Einstellkassette (AT-750778) wiedergeben und die Schrauben Ⓒ (FWD-Riechtung) und ⓓ (REV-Richtung) so einstellen, daß die Pegel beider Kanäle Maximum sind. (HINWEIS: Die schrauben nicht zu weit drehen, da andere (falsche) Maximalwerte weiter entfernt auf beiden Seiten der korrekten Positionen auftreten.

6-3 EINSTELLUNG DER TONKOPFHÖHE

Diese Einstellung ist nicht erforderlich da das GX-R55 mit einem rotierenden Kopfsystem (mit Löschkopf REC/PB-Kombikopf) ausgestattet ist. Eine Überprüfung auf korrekte Kopfhöhe ist jedoch erforderlich und wird wie folgt ausgeführt.

1) Zunächst wie im Abschnitt 6-2 beschrieben, den Azimuth überprüfen.
2) Eine 315Hz (oder 333Hz) Wiedergabepegel-Abgleichcassette (AT-750773) in der FWD Wiedergabe-Betriebsart abspielen und den Wiedergabepegel-Einstellwiderstand (VR5 auf der Vorverstärker-Leiterplatte) so einstellen, daß der LINE OUT Pegel des linken Kanals -5,5dBm beträgt. Danach den pegel des gleichen Kanals in der REV-Betriebsart überprüfen. Die Pegeldifferenz zwischen den Betriebsarten FWD und REV sollte innerhalb ± 1dBm liegen (-4,5dBm bis -6,5dBm).
3) Wenn im obigen Abschnitt 2 die Differenz mehr als ± 1dBm beträgt, nimmt man die Einstellung der Bandführungen A und B durch Drehen der Bandführungshöhen-Einstellschrauben (a) und (b) vor, die man in der gleichen Richtung um jeweils 1/4 Umdrehungen (±0,1 mm) dreht, so daß die Differenz innerhalb ± 1dBm liegt.
4) Wenn die Differenz durch die obige Einstellung sich nicht korrigieren läßt, ist eine Einstellung der Kopfhöhe erforderlich. Diese Kann durch Veränderung der kopfhöhen-Einstellscheiben (i), (j) und (k) vorgenommen werden. (Die Dicke dieser Scheiben ist (i) = 0,45 mm, (j) und (k) = 0,3 mm). Für den Scheibenaustausch die Schrauben (e), (f) und (g) lösen.
Wenn der Pegel in der REV-Betriebsart niedriger ist, bedeutet dies, daß der Kopf zu hoch ist, daher sind in diesem Falle die Unterlegscheiben gegen dünnere auszutauschen. Wenn der Pegel in de REV-Betriebsart höher ist, nimmt ma den Austausch gegen dickere vor.
Nach dem Austausch der Unterlegscheiben nimmt man die gleiche Einstellung wie im Abschnitt 1 vor und stellt sicher, daß der LINE OUT Pegel -5,5dBm ± 1dBm beträgt.
Zur wietern Kontrolle ist ein 4-Spur-Kopfhöhen-Einstellband (1kHz/4-Spur AT-750775) abzuspielen. Der Line Ausgangspegel beider Kanäle sollte mehr als -8dBm betragen und die Differenz im Pegel zwischen den Betriebsarten FWD und REV sollte innerhalb ±1dBm liegen. Anderenfalls ist ein Feinabgleich in der gleichen Weise wie in den Abschnitten 3 und 4 auszuführen.
5) Ein evtl. erforderlicher Kopfaustausch wird leicht gemacht, indem man nur die Schrauben (a) und (b) in Abbildung 6-1 löst.

6-4 KOPFBLOCKVORSPRUNG-EINSTELLUNG (siehe Abb. 6-2 und 6-3)

Eine Tonkopfvorsprung-Messcassette (AT-751180) verwenden und die Betribsart EWD oder REV Wiedergabe wählen.
Die Schraube (h) lösen und das Kopfträger-Chassis so einstellen, daß das Meßgerät 3,4 ± 0,15 mm anzeigt.
Nach der Einstellung die Schraube (i) mit Siegellack sichern.

VII. ELEKTRISCHER ABGLEICH

7-1 ABGLEICH DER QUICK-REVERSE-EMPFINDLICHKEIT

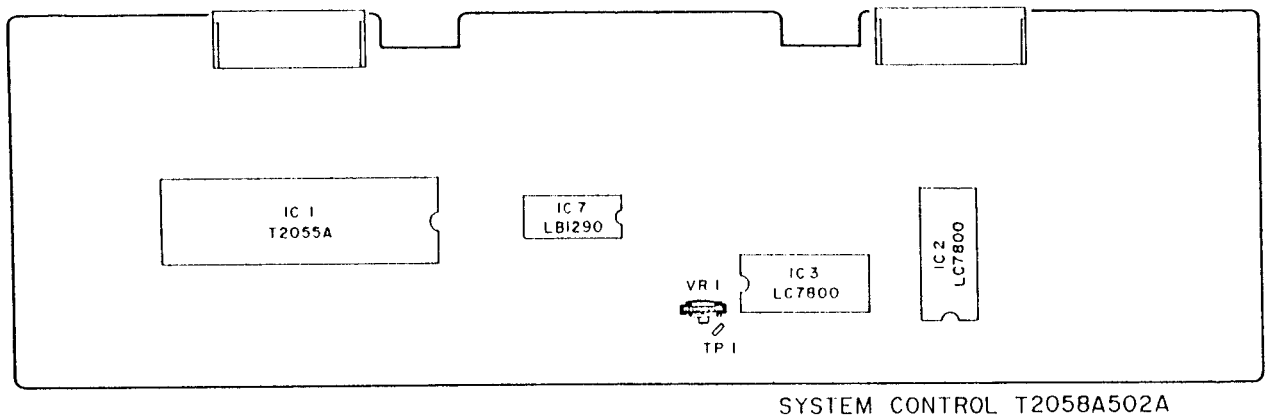

Abb. 7-1 GX-R55 Abgleich reverse-Empfindlichkeit

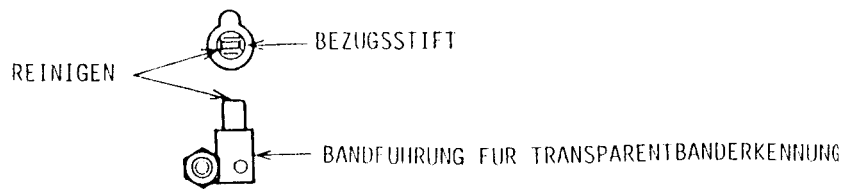

Abb. 7-2

1) Durch Entanahme des Bandes aus einer weißen Testcassette eine bandlose Cassette herstellen.
2) EinDigitalvoltmeter zwischen TP-1 und Masse anschließen.
3) Unter Verwendung der bandlosen Cassette den Regelwiderstan VR1 so abgleichen, daß das Digitalvoltmeter in der FWD Widergabe 14V $\pm$ 0,5V Gleichspannung anzeigt.
4) Werden die erwähnten 14V nicht erreicht, ist der Widerstand R18 (150k ohm) auf der Systemsteuer-Leiterplatte auszubauen und der Regelwiderstand VR1 nochmals in der gleichen Weise wie im Abschnitt abzugleichen.

HINWEIS: Vor diesem Abgleich den Bezugsstift und die Bandführung für Transparentbanderkennung reinigen (siehe Abb. 7-2)

7-2 ABGLEICH DER VORVERSTÄRKER-LEITERPLATTE

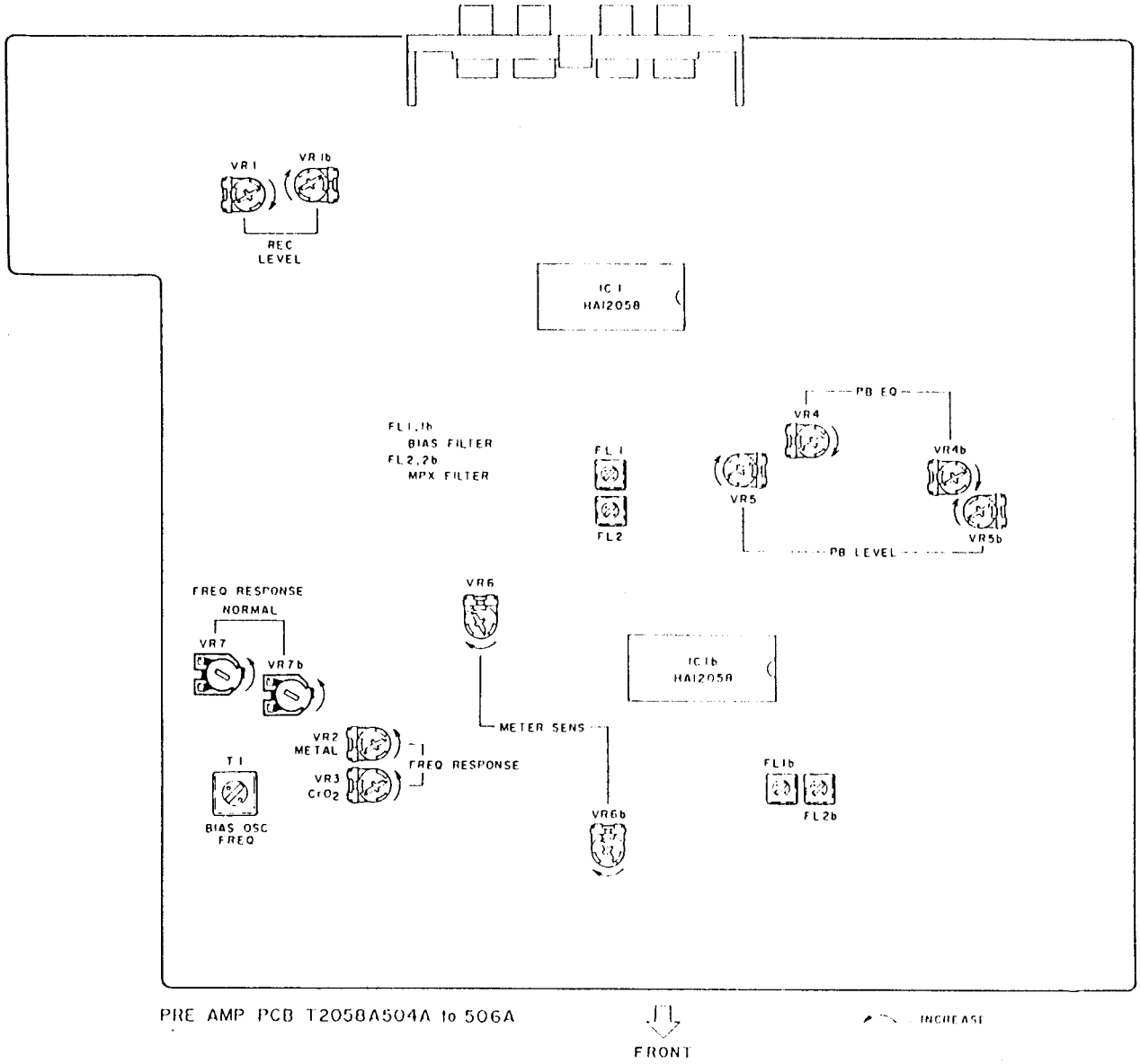

Abb. 7-3 CX-R55 Abgleichpunkte an der Vorverstärker-Leiterplatte

Schritt	Abgleichgegenstand	Testcassette und angelegtes signal	Betriebsart	Abgleichteil	Ergebnis	Bemerkungen
1	FWD PB Pegel	333Hz (AT-750773) oder 315Hz (AT-750773)	FWD PB	VR5	-6,1 ± 0,2dBm oder -5,5 ± 0,2dBm	
2	REV PB Pegel	333Hz (AT-750773) oder 315Hz (AT-750773)	REV PB		-6,1 ± 0,2dBm oder -5,5 ± 0,2dBm	Prüfung
3	FWD PB EQ	10kHz-15dB (AT-750778)	FWD PB	VR4	-20,5 ± 0,5dBm	
4	REV PB EQ	10kHz-15dB (AT-750778)	REV PB		-20,5 ± 0,5dBm	Prüfung
5	BIAS OSC FREQ	Kein Signaleingang	REC	T1	100kHz ± 0,5kHz	
6	Frequenzgang Normalposition	Normal-Leercassette 1kHz, 10kHz -25,5dBm	REC/PB	VR7	1kHz, 10kHz Linear ± 0,3dB	
7	Frequenzgang CrO_2-Position	CrO_2-Leercassette 1kHz, 10kHz-25,5dBm	REC/PB	VR3	1kHz, 10kHz Linear ± 0,8dB	
8	Frequenzgang Reineisenband-Position	Reineisenband-Leercassette 1kHz, 10kHz -25,5dBm	REC/PB	VR2	1kHz, 10kHz Linear ± 0.8dBm	
9	REC Pegel	Normalband-Leercassette 1kHz, -5,5dBm	REC/PB	VR1	-5,5 ± 0,5dBm	
10	Vormagnetisierungsfilter	Kein Signaleingang	REC	FL1	Minimumausgang	Aussteuerungsregler auf Maximum stellen
11	Anzeige empfindlichkeit	1kHz Eingang	REC PAUSE	VR6	Ovu Anzeige bei Line Ausgang -5,9 ± 0,2dBm	Zu diesem Zeitpunkt den Line Ausgangspegel um 0,1dB senken und Prüfen, daß die Ovu Anzeige erlischt.
12	MPX-Filter	19kHz vom Oszillator	REC	FL2	Minimumausgang	MPX-Filterschalter "ON"

HINWEIS:
1. Alle obigen Einstellungen außer für Schritt 5, 10 und 12 gelten für die FWD-Betriebsart; diese Einstellungen sind im REV-Betrieb nicht erforderlich, aber die Prüfung jedes Schritts in der REV-Betriebsart sollte ausgeführt werden.
2. Obiger Abgleich, außer für Schritt 12, nur mit ausgeschalteter Dolby-Rauschunterdruckung ausführen.
3. Zum Adgleich nur folgende Bänder verwenden:
   Normalband: Maxell UD C-60
   CrO_2 Band: TDK SA C-60
   Reineisenband: TDK MA C-60
4. Für weitere Einstellungen siehe Abbildung 7-3.

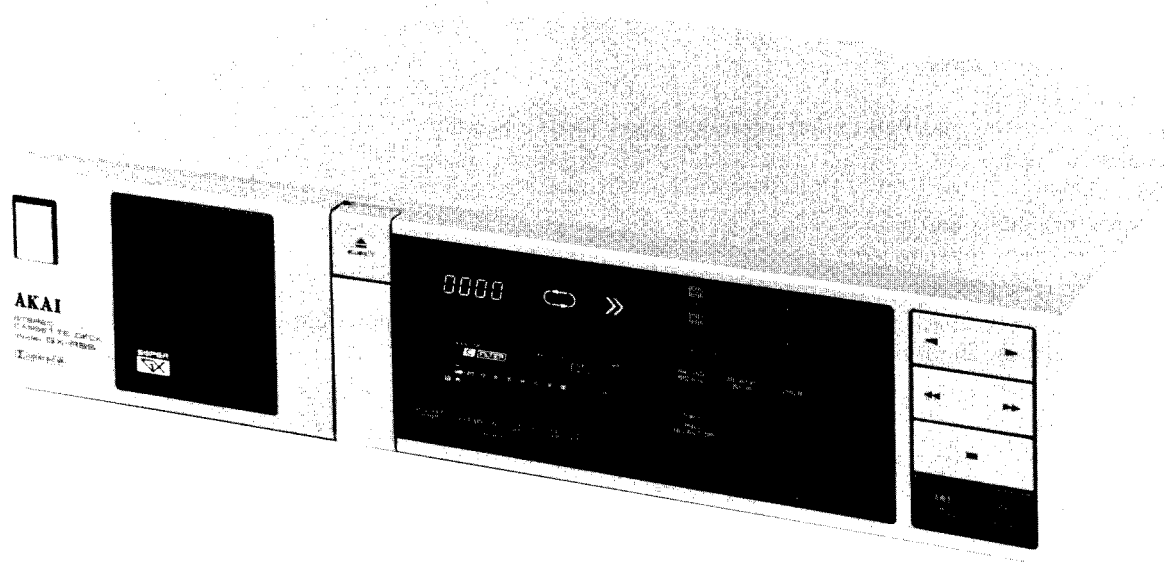

STEREO CASSETTE DECK

MODEL GX-R55

SECTION 1 SERVICE MANUAL 3
SECTION 2 PARTS LIST 15

SAFETY INSTRUCTIONS

SAFETY CHECK AFTER SERVICING

Confirm the specified insulation resistance between power cord plug prongs and externally exposed parts of the set is greater than 10 Mohms, but for equipment with external antenna terminals (tuner, receiver, etc.) and is intended for [C] or [A], specified insulation resistance should be more than 2.2 Mohms (ground terminals, microphone jacks, headphone jacks. line-in-out jacks etc.)

PRECAUTIONS DURING SERVICING

1. Parts identified by the ⚠ symbol parts are critical for safety.
   Replace only with parts number specified.
2. In addition to safety, other parts and assemblies are specified for conformance with such regulations as those applying to spurious radiation. These must also be replaced only with specified replacements.
   Examples: RF converters, tuner units, antenna selector switches, RF cables, noise blocking capacitors, noise blocking filters, etc.
3. Use specified internal wiring. Note especially:
   1) Wires covered with PVC tubing
   2) Double insulated wires
   3) High voltage leads
4. Use specified insulating materials for hazardous live parts. Note especially:
   1) Insulation Tape
   2) PVC tubing
   3) Spacers (Insulating Barriers)
   4) Insulation sheets for transistors
   5) Plastic screws for fixing microswitch (especially in turntable)
5. When replacing AC primary side components (transformers, power cords, noise blocking capacitors, etc.), wrap ends of wires securely about the terminals before soldering.

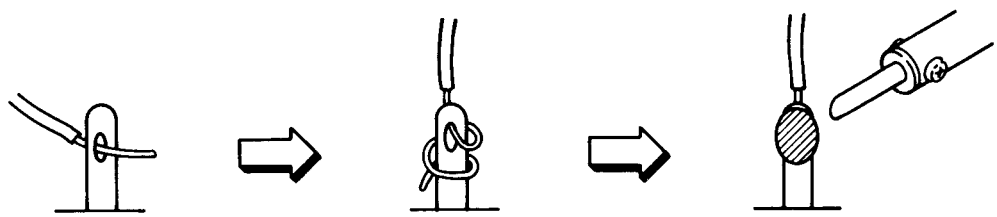

6. Observe that wires do not contact heat producing parts (heatsinks, oxide metal film resistors, fusible resistors, etc.).
7. Check that replaced wires do not contact sharp edged or pointed parts.
8. Also check areas surrounding repaired locations.
9. Use care that foreign objects (screws, solder droplets, etc.) do not remain inside the set.

VOLTAGE CONVERSION

Models for Japan, Canada, USA, Europe, UK and Australia are not equipped with this facility.
Each machine is preset at the factory according to destination, but some machines can be set to 110V, 120V, 220V or 240V as required.
If VOLTAGE CHANGE is necessary, this can be accomplished as follows:

1. Disconnect power cord.
2. Turn the VOLTAGE SELECTOR located on the rear panel with a screwdriver until the correct voltage is indicated.

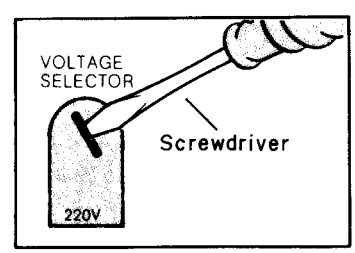

CYCLE CONVERSION

Cycle conversion is not necessary since GX-R55 use a DC motor.

SECTION 1

SERVICE MANUAL

TABLE CONTENTS

I. SPECIFICATIONS 3
II. DISMANTLING OF UNIT 5
III. CONTROLS 6
IV. PRINCIPAL PARTS LOCATION 7
V. MECHANICAL ADJUSTMENT 8
5-1 PINCH ROLLER PRESSURE MEASUREMENT 8
5-2 WINDING TORQUE MEASUREMENT IN EACH MODE 8
5-3 TAPE SPEED ADJUSTMENT 8
VI. HEAD ADJUSTMENT 9
6-1 TAPE GUIDE ADJUSTMENT 10
6-2 REC/PB HEAD AZIMUTH ADJUSTMENT 10
6-3 HEAD HEIGHT ADJUSTMENT 10
6-4 HEAD BLOCK PROJECTION ADJUSTMENT 10
VII. ELECTRICAL ADJUSTMENT 11
7-1 QUICK REVERSE SENSITIVITY ADJUSTMENT 11
7-2 PRE-AMP PCB ADJUSTMENT 12
VIII. DC RESISTANCE OF HEADS 14
IX. P.C BOARD TITLES AND IDENTIFICATION NUMBERS 14

For basic adjustments, measuring methods, and operating principles, refer to GENERAL TECHNICAL MANUAL.

I. SPECIFICATIONS

TRACK SYSTEM	4 track 2 channel stereo system
TAPE	Philips type cassette
HEADS	Erase head x 1 Twin field super GX head for REC/PB x 1
MOTORS	Electronically speed controlled DC motor for capstan drive x 1 DC motor for cam drive x 1
WOW & FLUTTER	±0.07% W. peak (EIAJ) 0.05% (W RMS) 0.12% (DIN)
FREQUENCY RESPONSE	Normal: 20 to 17,000 Hz ±3 dB (EIAJ) CrO_2: 20 to 18,000 Hz ±3 dB (EIAJ) Metal: 20 to 19,000 Hz ±3 dB (EIAJ)
S/N	60 dB 56 dB (EIAJ) Dolby B ON: Improves up to 5 dB at 1 kHz, 10 dB above 5 kHz. Dolby C ON: Improves up to 15 dB at 500 kHz, 20 dB at 1 kHz to 10 kHz
DISTORTION	0.65% (METAL) 0.55% (METAL) 0.25% (CrO_2) 0.15% (NORMAL) } (EIAJ)
INPUT	Line: 410 mV/47 kohms
OUTPUT	Line: 410 mV/1 kohms
POWER REQUIREMENTS	100V, 50/60 Hz for Japan 120V, 60 Hz for USA and Canada 220V, 50 Hz for Europe except UK 240V, 50 Hz for UK and Australia 110V/120V/220V/240, 50/60 Hz switchable for other countries
DIMENSIONS	440 (W) x 105 (H) x 288 (D) mm (17.3 x 4.1x 11.3 inches)
WEIGHT	4.8 kg (10.6 lbs)

* For improvement purposes, specifications and design are subject to change without notice.
* Noise reduction manufactured under license from Dolby Laboratories Licensing Corporation. "Dolby" and the Double-D symbol are trade marks of Dolby Laboratories Licensing Corporation.

II. DISMANTLING OF UNIT

In case of trouble, etc. necessitating dismantling, please dismantle in the order shown in the photographs. Reassemble in reverse order.

1

2

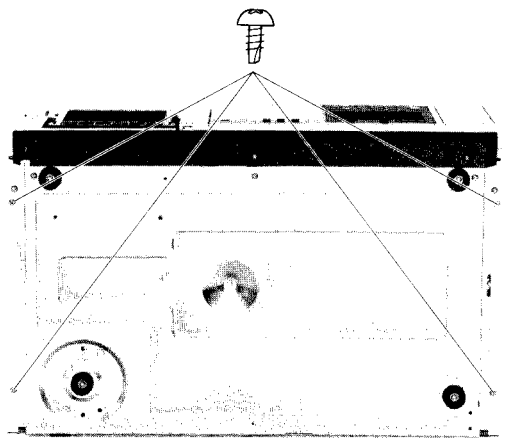

3

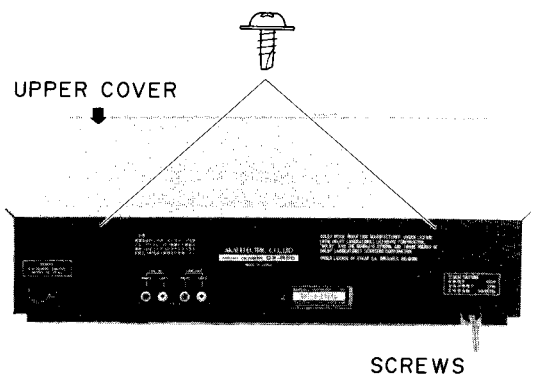

4

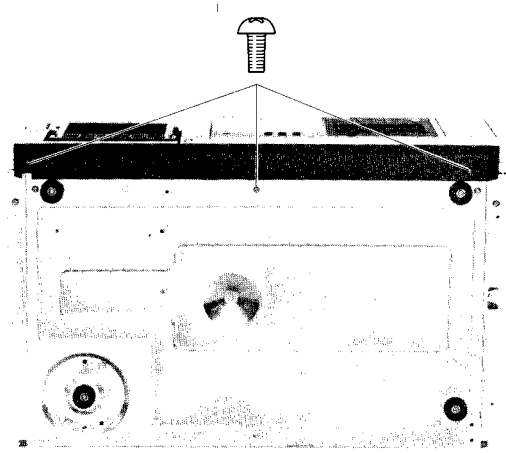

5

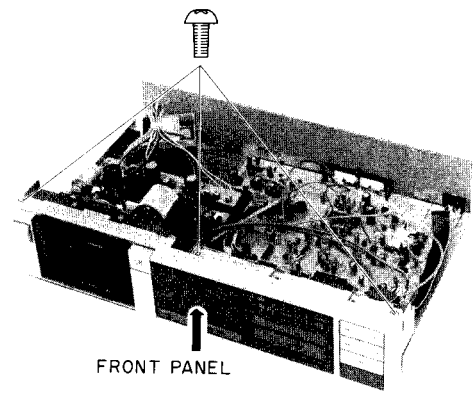

6

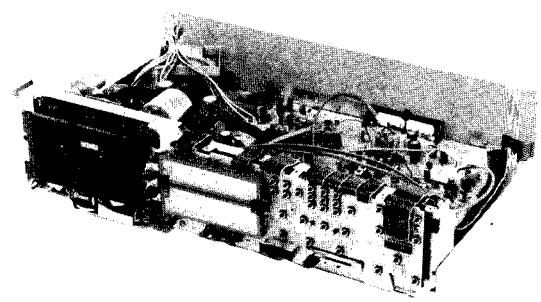

III. CONTROLS

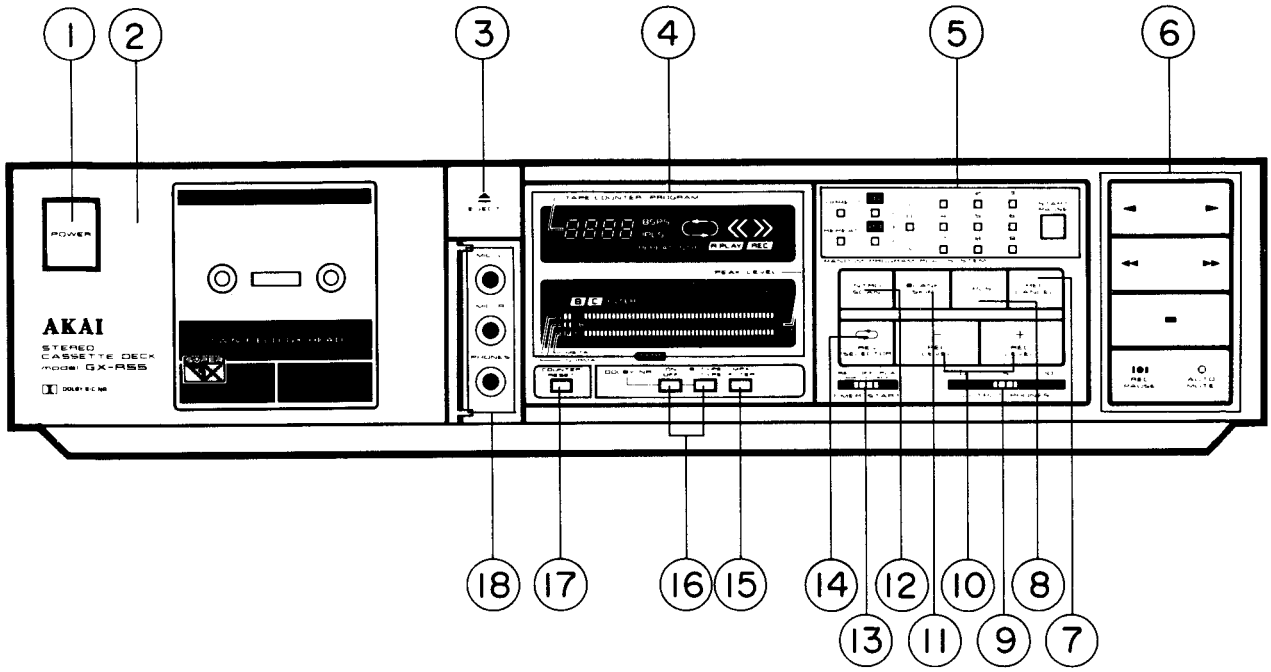

Fig. 3-1

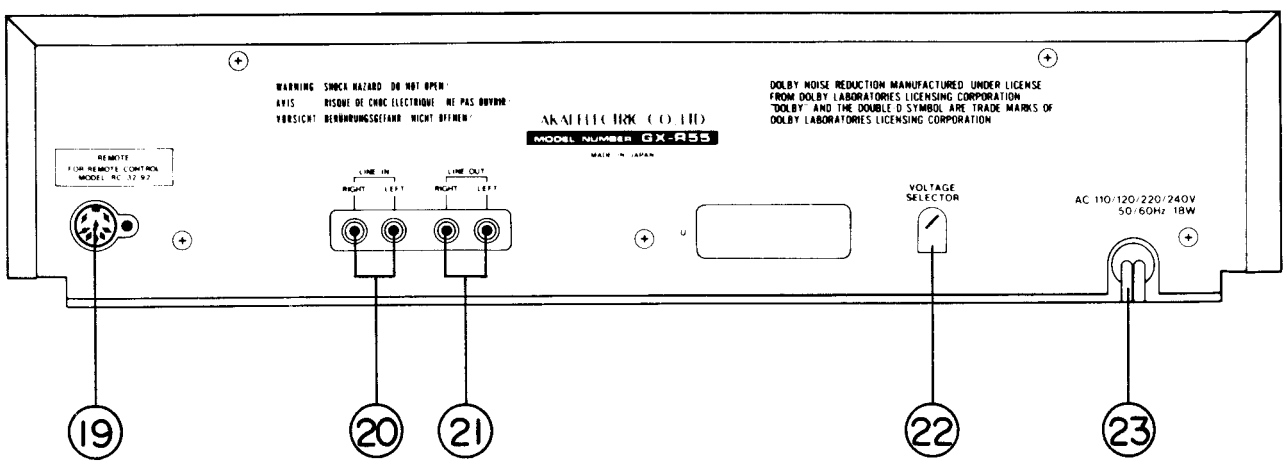

Fig. 3-2

1. POWER SWITCH
2. CASSETTE LID
3. EJECT BUTTON
4. FL DISPLAY
5. RPPS BUTTONS
6. OPERATION BUTTONS
7. REC CANCEL BUTTON
8. IPLS BUTTON
9. OUTPUT/PHONES CONTROL
10. REC LEVEL CONTROL
11. BLANK SKIP BUTTON
12. INTRO SCAN BUTTON
13. TIMER START SELECTOR
14. REV SELECTOR BUTTON
15. MPX FILTER BUTTON
16. DOLBY NR SWITCH AND SELECTOR
17. COUNTER RESET BUTTON
18. CONTAINS JACK FOR MIC L/R AND HEADPHONE
19. REMOTE CONTROL JACK
20. LINE IN JACKS
21. LINE OUT JACKS
22. VOLTAGE SELECTOR (U MODEL ONLY)
23. AC POWER CORD

IV. PRINCIPAL PARTS LOCATION

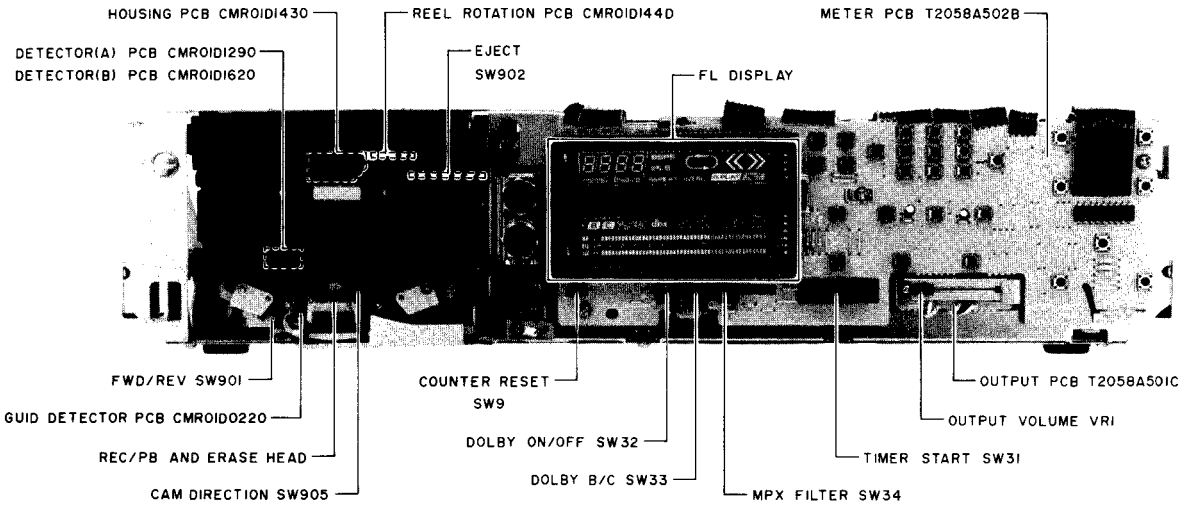

Fig. 4-1 Front View

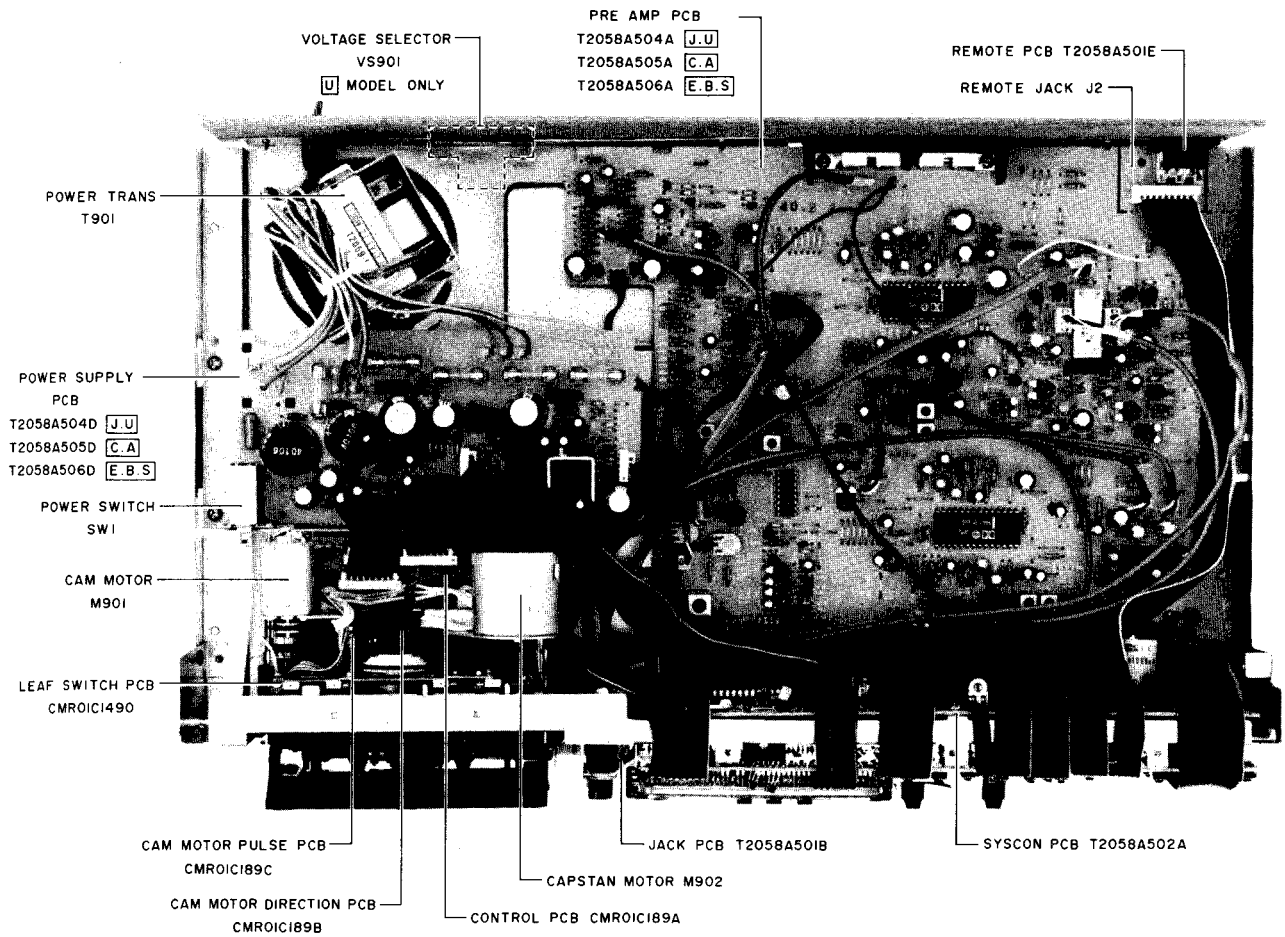

Fig. 4-2 Top View

V. MECHANICAL ADJUSTMENT

5-1 PINCH ROLLER PRESSURE MEASUREMENT (Refer to Fig. 5-1)

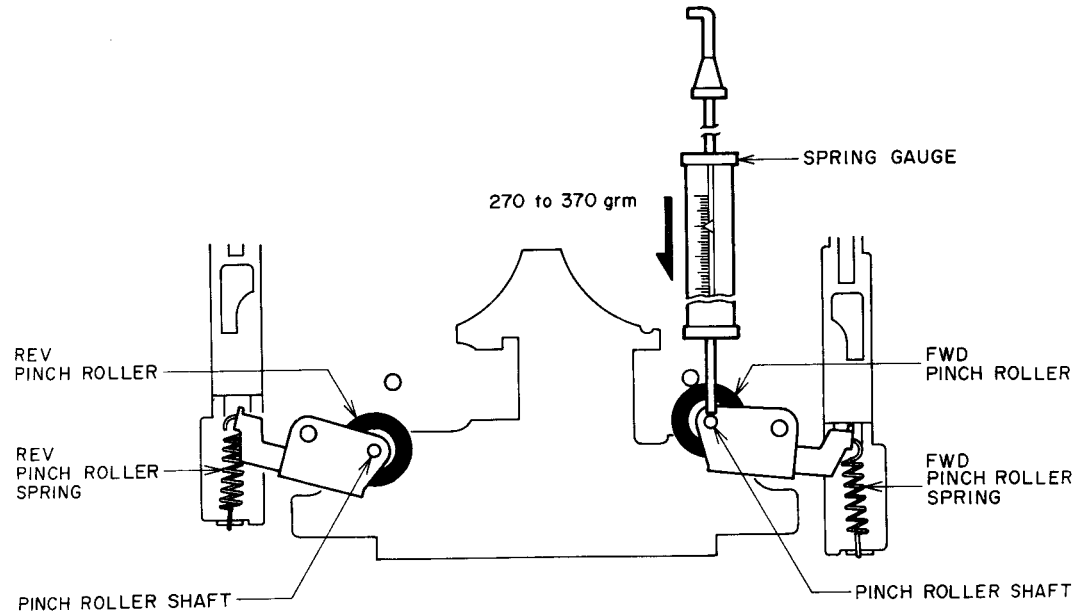

Fig. 5-1

Put in FWD PLAY Mode. Push pinch roller shaft down with the spring gauge, and push the pinch roller 1 to 2 mm away from the capstan and release slowly.
Read the spring gauge at the moment the pinch roller touches the capstan and begins to rotate. Specified contact pressure measurement is 270 to 370 grams.
If the correct measurement is not obtained, replace the pinch roller spring. Do the same for the reverse side.

5-2 WINDING TORQUE MEASUREMENT IN EACH MODE (Refer to Fig. 5-2)

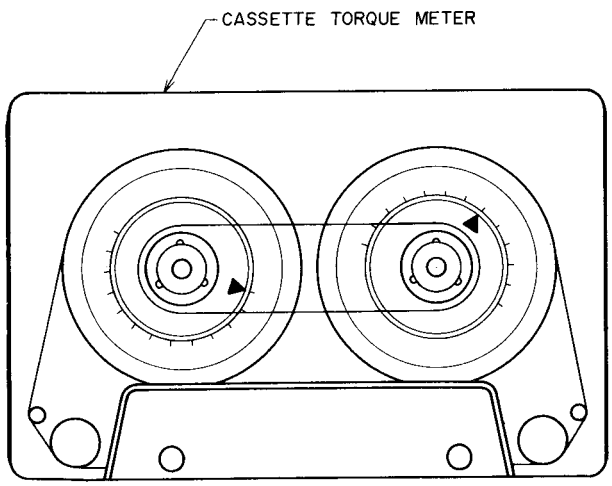

Fig. 5-2

Insert a cassette torque meter (AJ-751179) and measure in each mode.
For Fast Forward and Rewind, measure at the end of the tape when the tape has stopped running.
Forward or Reverse mode
Take up Torque: 25 to 45 g-cm
Back Tension Torque: 2 to 5 g-cm
Fast Forward or Rewind mode
Take up Torque: 70 to 150 g-cm

5-3 TAPE SPEED ADJUSTMENT (Refer to Fig. 5-3)

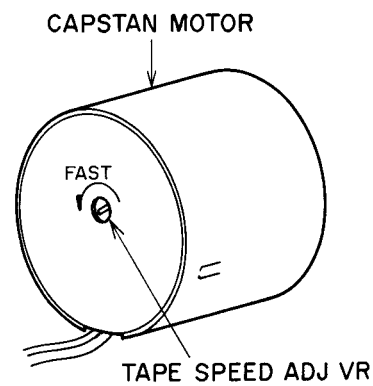

Fig. 5-3 Location of Tape Speed Adjustment Variable Resistor

Fig. 5-3 Location of Tape Speed Adjustment Variable Resistor Connect a frequency counter to Line Output terminal. Playback a 1,000 Hz pre-recorded Test Tape (AT-750744), or 3,150 Hz pre-recorded Test Tape (AT-751263), and adjust the Tape Speed Adjustment Variable Resistor (See Fig. 5-3) to obtain a tape speed of 1000±3 Hz, or 3150±10 Hz.

VI. HEAD ADJUSTMENT

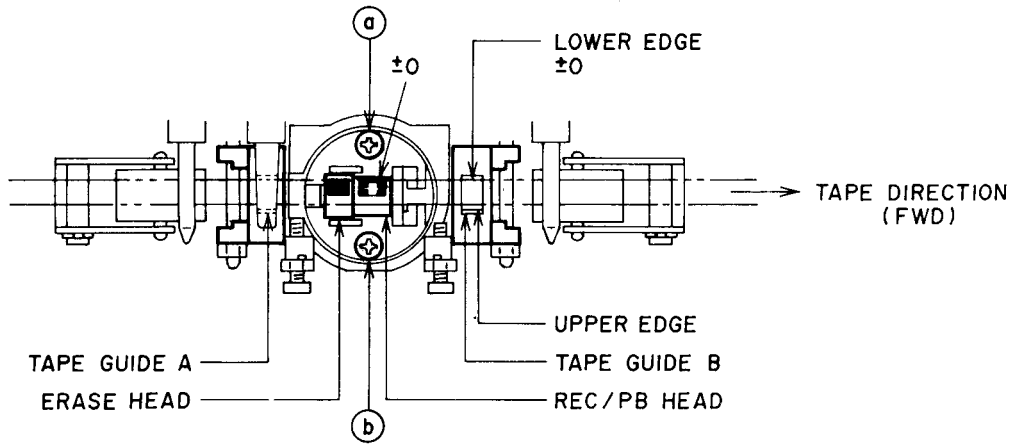

Fig. 6-1

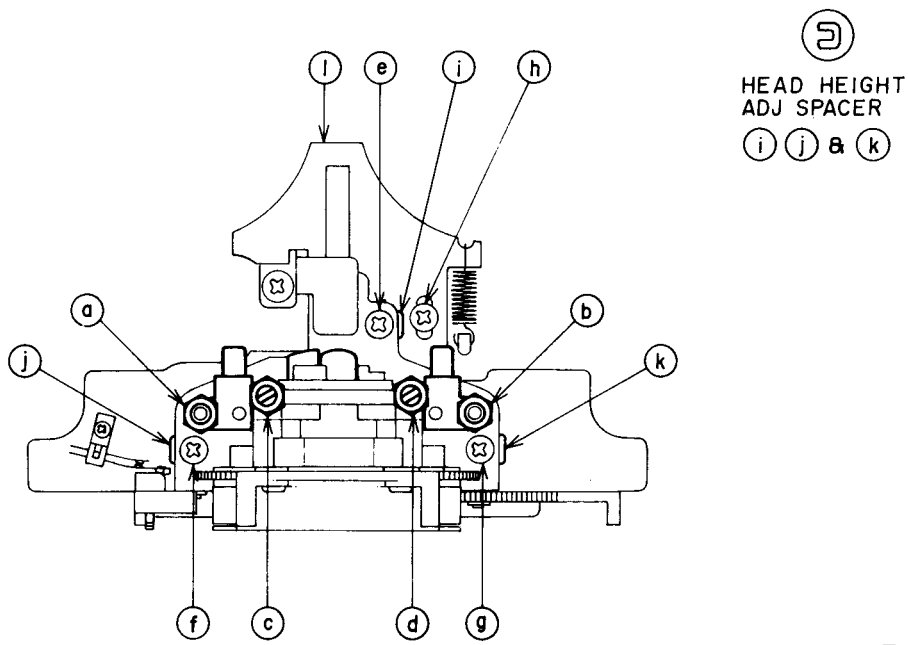

Fig. 6-2

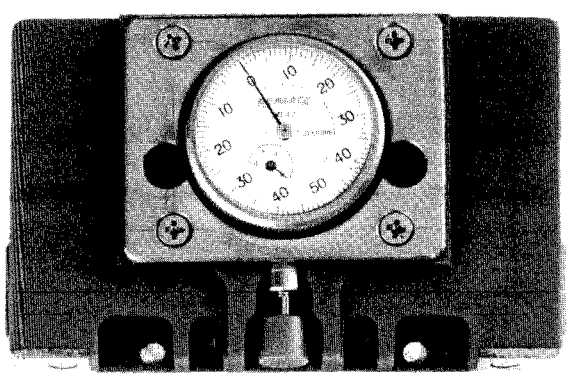

Fig. 6-3 Cassette Head Projection Gauge (TF-111CJ)

Fig. 6-4 Mirror Cassette Tape (MC-12C)

6-1 TAPE GUIDE ADJUSTMENT (Refer to Figs. 6-1, 6-2, & 6-4)

1) Use a mirror Cassette Tape (AT-751178) shown in Fig. 6-3 for better visibility of the head area, and select PLAY mode.
2) Adjust the tape guides A and B by turning the tape guide height adjustment nuts ⓐ and ⓑ in Fig. 6-2, so that the tape runs smoothly by the lower edge of both tape guides, and the tape is not hitched by those tape guides.

6-2 REC/PB HEAD AZIMUTH ADJUSTMENT

Playback a 10 kHz Head Azimuth Adjustment Tape (AT-750778) and adjust the screws ⓒ (FWD direction) and ⓓ (REV direction), so that the levels of both channels are maxima. (NOTE: Avoid turning the screws too far as other false maxima exist further away on both sides of the correct position.)

6-3 HEAD HEIGHT ADJUSTMENT

This adjustment is not necessary since GX-R55 is equipped with Roatary Head System (with Erase & REC/PB combination head). However, the confirmation of head height is necessary and it can be done as follows.

1) Confirm the azimuth in item 6-2.
2) Playback a 315 Hz (or 333 Hz) PB Level Adjustment Tape (AT-750773) in FWD Play mode, and adjust the PB level Adjuster (VR5 on Pre-Amp P.C Board) so that the LINE OUT level of left channel is −5.5 dBm. Then, check the level of the same channel in REV mode. The difference in level between FWD and REV modes should be within ±1 dBm. (−4.5 dBm to −6.5 dBm)
3) If the difference is more than ±1 dBm in item 2), adjust the tape guides A & B by turning both Tape Guide Height Adjustment screws ⓐ & ⓑ in the same direction by 1/4 turn (±0.1 mm), so that difference is within ±1 dBm.
4) The Head Height Adjustment is necessary if still the difference could not be corrected by above adjustment. It can be done by changing the Head Height Adjustment Spacers ⓘ ⓙ & ⓚ . (The thicknesses of these spacers are ⓘ =0.45 mm, ⓙ & ⓚ = 0.3mm).
   Loosen the screws ⓔ ⓕ & ⓖ for the spacer replacement.
   If the level is lower in REW mode, it means that the head is too hight, therefore replace the spacers by thinner ones. When the level is higher in REV mode, replace them by thicker ones.
   After the replacement of those spacers, do the same adjustment in item 1) and check the level of LINE OUT is −5.5 dBm ±1 dBm.
   For the further confirmation, playback a 4 Track Head Height Adjustment Tape (1 kHz/4 Track, AT-750775). Lint output level of both channels should be more than −8 dBm and the difference in level between FWD and REV modes should be within ±1 dBm. Otherwise do the fine adjustment in the same manners as item 3) & 4).
5) When the head replacement is necessary, loosen only the screws ⓐ & ⓑ in Fig. 6-1 for easy replacement.

6-4 HEAD BLOCK PROJECTION ADJUSTMENT (Refer to Figs. 6-2 & 6-3)

Use a cassette Head Projection Gauge (AT-751180) and select FWD or REV play mode.
Loosen the screw ⓗ and adjust Chassis Head Part ⓘ so that the gauge indication at the time is 3.4±0.15 mm.
After the adjustment, apply paint-lock on the screw ⓗ .

VII. ELECTRICAL ADJUSTMENT

7-1 QUICK REVERSE SENSITIVITY ADJUSTMENT

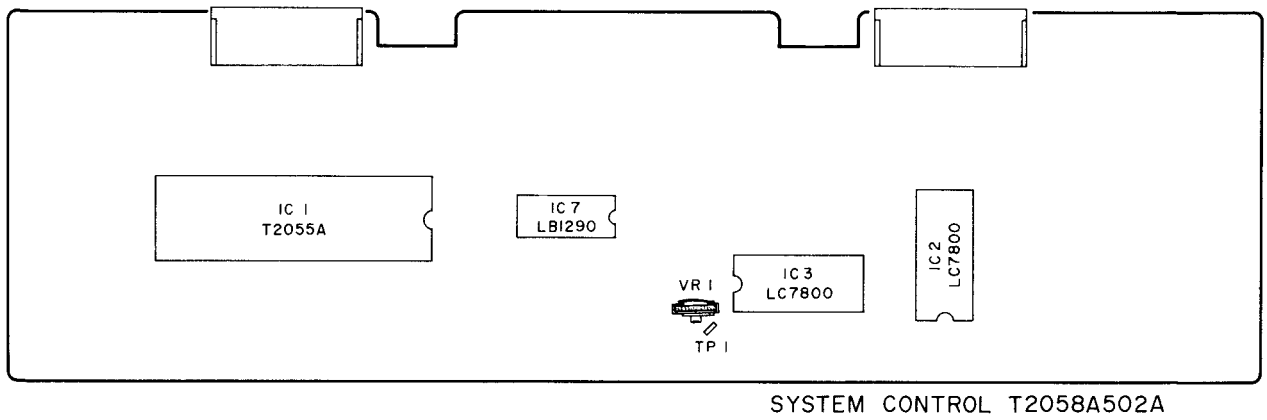

Fig. 7-1 GX-R55 Quick Rev. Sens. Adjustment point

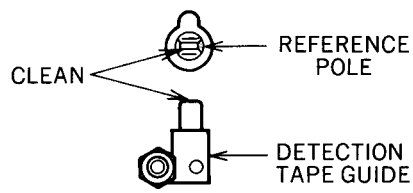

Fig. 7-2

1) Make a tapeless cassette pack by removing the tape from the white colored test tape.
2) Connect a Digital Voltmeter between TP-1 and Ground.
3) Using the tapeless cassette pack, adjust VR1 so that the Digital voltmeter reads 14V ± 0.5V DC at FWD play mode.
4) If the Digital voltmeter reading is not increase to 14V DC at VR1 maximum. Remove the Resister R18 (150 kohms) from the system control P.C Board, and again adjust VR1 as the same manner in item 3).

NOTE: Clean the reference pole and the Detec tion tape guide before adjustment. (Refer to Fig. 7-2)

7.2 PRE-AMP P.C BOARD ADJUSTMENT

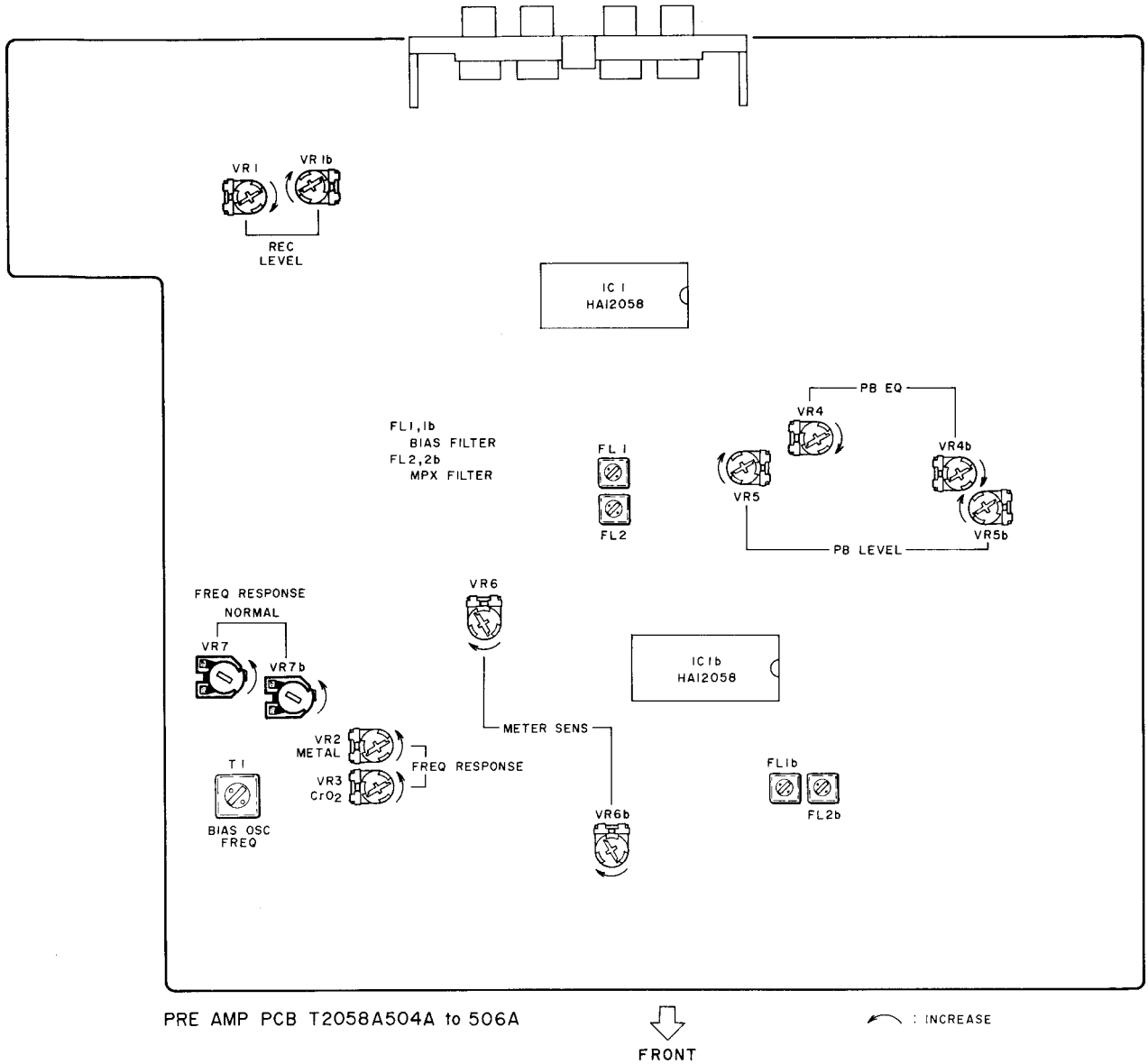

Fig. 7-3 GX-R55 Pre-Amp PCB ADJ Points

Step	Adjustment Item	Test Tape & Supply Signal	Mode	Adjustment Parts	Results	Remarks
1	FWD PB Level	333 Hz (AT-750773) or 315 Hz (AT-750773)	FWD PB	VR5	−6.1 ± 0.2 dBm or −5.5 ± 0.2 dBm	
2	REV PB Level	333 Hz (AT-750773) or 315 Hz (AT-750773)	REV PB		−6.1 ± 0.2 dBm or −5.5 ± 0.2 dBm	Confirmation
3	FWD PB EQ	10 kHz−15 dB (AT-750778)	FWD PB	VR4	−20.5 ± 0.5 dBm	
4	REV PB EQ	10 kHz−15dB (AT-750778)	REV PB		−20.5 ± 0.5 dBm	Confirmation
5	BIAS OSC FREQ.	No Signal Input	REC	T1	100 kHz ± 0.5 kHz	
6	Normal Position Frequency Response	Normal Blank Tape 1 kHz, 10 kHz −25.5 dBm	REC/PB	VR7	1 kHz, 10 kHz Flat ± 0.3 dB	
7	CrO_2 Position Frequency Response	CrO_2 Blank Tape 1 kHz, 10 kHz −25.5 dBm	REC/ PB	VR3	1 kHz, 10 kHz Flat ± 0.8 dB	
8	Metal Position Frequency Response	Metal Blank Tape 1 kHz, 10 kHz −25.5 dBm	REC&PB	VR2	1 kHz, 10 kHz Flat ± 0.8 dBm	
9	REC Level	Normal Blank Tape 1 kHz, −5.5 dBm	REC/PB	VR1	−5.5 ± 0.5 dBm	
10	Bias Filter	No Signal input	REC	FL1	Minimum output	Set REC Volume to Maximum
11	Meter Sensitivity	1 kHz input	REC PAUSE	VR6	Ovu indicated at Line output −5.9 ± 0.2 dBm	At this time, 0.1 dB decrease the Line Output level and confirm the Ovu indicator is light off.
12	MPX Filter	19 kHz from oscillator	REC	FL2	Minimum output	MPX Filter SW "ON"

NOTES:
1. Above adjustments except for Step 5, 10 to 12 are all at FWD mode, and these adjustments at REV mode are not necessary, but the confirmation of each step at REV mode should be made.
2. Above adjustment except for step 12, adjustment should be made with Dolby N.R at OFF position.
3. Use only the tapes recommended for each adjustment:
   NORMAL tape : MAXELL UD C-60
   CrO_2 tape : TDK SA C-60
   METAL tape : TDK MA C-60
4. Refer to Fig. 7-3 for above adjustments.

VIII. DC RESISTANCE OF HEADS

Description	DC Resistance
REC HEAD	50 ohms ± 10%
P.B HEAD	340 ohms ± 10%
ERASE HEAD	3.5 ohms ± 10%

IX. P.C BOARD TITLES AND IDENTIFICATION NUMBERS

P.C Board Title		P.C Board Number	Remark
PRE - AMP	P.C Board	T2058A504A	J U
PRE - AMP	P.C Board	T2058A 505A	C A
PRE - AMP	P.C Board	T2058A506A	E B S
JACK	P.C Board	T2058A501B	
OUTPUT	P.C Board	T2058A501C	
REMOTE	P.C Board	T2058A501E	
SYSCON	P.C Board	T2058A502A	
METER	P.C Board	T2058A502B	
POWER SUPPLY	P.C Board	T2058A504D	J U
POWER SUPPLY	P.C Board	T2058A505D	C A
POWER SUPPLY	P.C Board	T2058A506D	E B S
FLEXIBLE	P.C Board	CMR01A0240	
CONTROL	P.C Board	CMR01C189A	
CAM MOTOR PULSE	P.C Board	CMR01C189C	
CAM MOTOR DIRECTION	P.C Board	CMR01C189B	
LEAF SWITCH	P.C Board	CMR01C1490	
REEL ROTATION	P.C Board	CMR01D144D	
GUID DETECTOR	P.C Board	CMR01D0220	
DETECTOR (A)	P.C Board	CMR01D1290	
DETECTOR (B)	P.C Board	CMR01D1620	
HOUSING	P.C Board	CMR01D1430	

SECTION 2

PARTS LIST

TABLE OF CONTENTS

RECOMMENDED SPARE PARTS 17
1. MECHA CMR01 BLOCK 18
2. PRE AMP AND POWER SUPPLY P.C BOARD BLOCK 20
3. SYSTEM CONTROL AND METER P.C BOARD BLOCK 20
4. ASSEMBLY BLOCK 21
5. FINAL ASSEMBLY BLOCK 22
INDEX 23

Resistors and Capacitors which are not listed in this parts list, please refer to COMMON LIST FOR SERVICE PARTS.

ATTENTION

1. When placing an order for parts, be sure to list the parts no. model no., and description. There are instances in which if any of this information is omitted, parts cannot be shipped or the wrong parts will be delivered.
2. Please be careful not to make a mistake in the parts no. If the parts no. is in error, a part different from the one ordered may be delivered.
3. Because parts number and parts unit supply in the Preliminary Parts List may be partially changed, please use this parts list for all future reference.

HOW TO USE THIS PARTS LIST

1. This Parts List shows the parts that are considered necessary for repairs. Other parts, such as resistors and capacitors, are shown in the "Common List for Service Parts". Select and order such parts from the "Common List for Service Parts".
2. The Recommended Spare Parts shows those parts in the Parts List which are considered particularly important for service.
3. Parts not shown in the Parts List and "Common List for Service Parts" will not be supplied in principle.
4. How to read list

a) Mechanism Block

2. HEAD BASE BLOCK

REF. NO.	PARTS NO.	DESCRIPTION
2-1x	BH-T2023A320A	HEAD BASE BLOCK GX-F66R
2-2	HP-H2206A010A	HEAD R/P PR4-8FU C
2-3	ZS-477876	PAN20x03STL CMT
2-4	ZS-536488	BID20x08STL CMT
2-5	ZG-402895	CS ANGLE ADJUST SPRING

SP (Service Parts) Classification

A small "x" indicates the inability to show that particular part in the Photo or Illustration.

This number corresponds with the individual parts index number in that figure

This number corresponds with the Figure Number

b) P.C Board Block

6. SYS. CON. P.C BOARD BLOCK

REF. NO.	PARTS NO.	DESCRIPTION
6-1	BA-T2034A070A	PC SYS CON BLK GX-F44R
6-IC1	EI-324536	IC HD14049BP
6-IC2	EI-336801	IC MB8841-564M
6-IC3	EI-331661	IC SN7405N
6-IC4	EI-336725	IC M54527P
6-TR1to4	ET-200985	TR 2SC2603 F,G
6-TR5to28	ET-554657	TR 2SA733A P,Q
6-D1	ED-318292	D SILICON H 1S2473T-77 T26
6-D2to4	ED-308952	D GERMA V 1K34A-LR F07
6-D5to10	ED-318292	D SILICON H 1S2473T-77 T26
6-X1	EI-318384	OSC X'TAL NC-18C 3.579545MHZ

SP (Service Parts) Classification

This reference numbers corresponds with symbol numbers of Schematic Diagrams.

5. Both the kind of part and installation position can be determined by the Parts Number. To determine where a parts number is listed, utilize Parts Index at end of Parts List. It is necessary first of all to find the Parts Number. This can be accomplished by using the Reference Number listed at right of parts number in the Parts Index.

WARNING

⚠ INDICATES SAFETY CRITICAL COMPONENTS. FOR CONTINUED SAFETY, REPLACE SAFETY CRITICAL COMPONENTS ONLY WITH MANUFACTURER'S RECOMMENDED PARTS.

AVERTISSEMENT

⚠ IL INDIQUE LES COMPOSANTS CRITIQUES DE SURETE. POUR MAINTENIR LE DEGRE DE SECURITE DE L'APPAREIL NE REMPLACER LES COMPOSANTS DONT LE FONCTIONNEMENT EST CRITIQUE POUR LA SECURITE QUE PAR DES PIECES RECOMMANDEES PAR LE FABRICANT.

RECOMMENDED SPARE PARTS

Because, if the parts listed below are on hand, almost any repair can be accomplished, we suggest that you stock these Recommended Spare Parts Items.

NO.		PARTS NO.	DESCRIPTION
1		BL-T2045A050A	ARM PINCH ROLLER (L) BLK HX-R5
2		BL-T2045A060A	ARM PINCH ROLLER (R) BLK HX-R5
3		BM-B604491	⚠ MOTOR (PULLEY) PART EG-510ED 2B2 (M902)
4		BM-B604490	⚠ MOTOR OPERATION (PULLY) PART (M901)
5		BR-344098	REEL TABLE (A) ASSY
6		BT-349620	⚠ TRANS POWER T2059 (A,C)
7		BT-349622	⚠ TRANS POWER T2059 (B, S)
8		BT-349621	⚠ TRANS POWER T2059 (E, V)
9		BT-349619	⚠ TRANS POWER T2059 (J)
10		BT-349618	⚠ TRANS POWER T2059 (U)
11		ED-330319	⚠ D SILICON DBA10B 100/1.0A
12		ED-349662	⚠ D SILICON DS135E-FA6 100/1.0A
13	N	ED-308953	D GERMA H 1K34A-LH S12
14		ED-310340	D LED GL350 INFRARED RAY (D902)
15		ED-349662	D SILICON DS135E-FA6 100/1.0A
16		ED-301911	D SILICON H DS448
17		ED-344280	D SILICON H GMA-01-FY2 F05
18		ED-624903	D SILICON H 1S2473
19		ED-338092	D ZENER H HZ2FA F10 B1
20	N	ED-346504	D ZENER H HZ20FA F10 3
21		ED-346455	D ZENER H HZ27FA F10 A1
22	N	ED-346440	D ZENER H HZ5FA F10 B1
23	N	ED-346446	D ZENER H HZ5FA F10 C3
24	N	ED-346450	D ZENER H HZ6FA F10 B2
25	N	ED-346454	D ZENER H HZ6FA F10 C3
26	N	ED-346469	D ZENER H HZ9FA F10 B2
27	N	ED-346264	D ZENER V HZ11LS7 F05 B2
28		ED-348062	D ZENER V HZ15-2S7
29	N	ED-338454	D ZENER V HZ9C-2S7
30		EF-339906	⚠ FUSE SEMKO T 250V 0.25A (E,B,S)
31		EF-668474	⚠ FUSE SEMKO T 250V 0.40A (E,B,S)
32		EF-593706	⚠ FUSE SEMKO T 250V 0.50A (E,B,S)
33		EF-306125	⚠ FUSE TSC A 250V 0.31A (U,J)
34		EF-327103	⚠ FUSE TSC A 250V 0.50A (U,J)
35		EF-309388	⚠ FUSE TSC A 250V 0.80A (U,J)
36		EF-308848	⚠ FUSE TSC 125V 0.40A (C,A)
37		EF-309390	⚠ FUSE TSC 125V 0.50A (C,A)
38		EF-309391	⚠ FUSE TSC 125V 0.80A (C,A)
39		EH-351182	FILTER DB 201AK-005 100KHZ
40		EH-351183	FILTER DB 201AK-006 19KHZ
41		EI-330352	IC BA6109
42		EI-337845	IC BA6146 M
43		EI-349196	IC HA12058
44		EI-337013	IC LB1290
45		EI-345765	IC LB1292
46		EI-343417	IC LB1294
47	N	EI-337009	IC LC4049B
48		EI-345759	IC LC7530
49		EI-337008	IC LC7800
50		EI-348701	IC M51143L
51		EI-337228	IC M5218L0
52		EI-348785	IC M5220L
53		EI-349388	IC M54418P
54		EI-349877	IC T2055A
55		EI-349372	OSC CE CSA4.00MG 4MHZ
56		EL-348214	PL LEAD 28.0V 24MA
57		EM-349595	IND FL FIP48AW11YS
58		EM-349594	IND FL FIP6GM7
59		EO-352104	COIL OSC 1 94-5009-01 100KHZ
60		EO-315758	COIL TUN 1 100Z-431 100.00KHZ
61		EO-337044	COIL TUN 1 102AK-005
62		EO-337055	COIL VARI 1 FE002S 10MH
63		EQ-337067	RELAY LEAD LAB2NS 2NO 18V
64		ES-305733	⚠ SW SELECTOR HXW0131-260 01-4 (U)
65		ES-344104	SW LEAF BSW-191 01-1 NO (SW901)
66		ES-344101	SW LEAF MD-1003 01-1 NO (SW905)
67		ES-336814	SW LEAF MSW-1150NBK 01-1 NO (SW902)
68		ES-344253	SW LEAF MSW-1418J 01-1 NO
69		ES-344257	SW LEAF MSW-1418L 01-1 NO
70		ES-347966	SW PUSH ESB-649 01-2-2 N
71		ES-344270	SW PUSH SDLD1P 01-1
72		ES-349597	SW SLIDE 00130329 BLACK 01-3 S
73		ES-349698	SW SLIDE 00130333 GRAY 01-3 S
74		ES-349640	SW TACT B3F-1050
75		ES-349367	SW TACT KHH10906
76		ET-344102	PHOTO SENSOR GP-1S04
77		ET-310341	PHOTO SENSOR PT350 T (TR902)
78		ET-311977	PHOTO SENSOR SPI-201
79	N	ET-200558	TR 2SA1115 E,F
80		ET-346298	TR 2SA1246 S,T
81		ET-348950	TR 2SA1345
82		ET-349605	TR 2SA1346
83		ET-349593	TR 2SA1348
84		ET-349718	TR 2SA1392 S,T
85		ET-352726	TR 2SA1392 T,U
86		ET-337968	TR 2SA999 E,F
87		ET-353067	TR 2SB744 P,Q,R
88	N	ET-309353	TR 2SC2274K E,F
89		ET-328578	TR 2SC2320 E,F
90	N	ET-200505	TR 2SC2603 E,F
91		ET-349272	TR 2SC3242A E,F
92		ET-349606	TR 2SC3382 T,U
93		ET-349081	TR 2SC3383 S,T
94		ET-349608	TR 2SC3383 T,U
95		ET-350795	TR 2SC3399
96		ET-349592	TR 2SC3400
97	N	ET-328868	TR 2SD1012-V G,H
98		ET-310148	TR 2SD612K E,F
99	N	ET-307349	TR 2SD794 P,Q
100		ET-349979	TR 2SD794 P,Q,R
101	N	EV-345610	R S-FIX H H0811C307A 3P 102
102	N	EV-342939	R S-FIX H H0811C313A 3P 103
103	N	EV-345611	R S-FIX H H0811C358A 3P 502
104	N	EV-342942	R S-FIX H H0811C362A 3P 503
105		EV-336785	R S-FIX H TM8KV2-1S 3P 0.50W 104
106		EV-522652	R S-FIX V V8K1-1 3P 105
107		EV-337841	VR SLIDE 30P2SV0A B103
108		HR-H2501A010A	HEAD COMBO EPR4-9
109		MB-344088	BELT CAM
110		MB-344041	BELT CAPSTAN
111		MB-344042	BELT WIND (A)
112		MB-344043	BELT WIND (B)
113		MB-344028	PULLEY RUBBER
114		MB-345139	WHEEL RUBBER
115		MI-344095	IDLER PLAY(L) ASSY
116		MI-344094	IDLER PLAY(R) ASSY

"NOTE" N : New Parts

SYMBOL FOR DESTINATION

A: AAL (U.S.A)
B: UK (England)
C: CSA (Canada)
J: JPN (Japan)
S: SAA (Australia)
U: U/T (Universal Area)
E: CEE (Europe)

MECHA CMR01 BLOCK

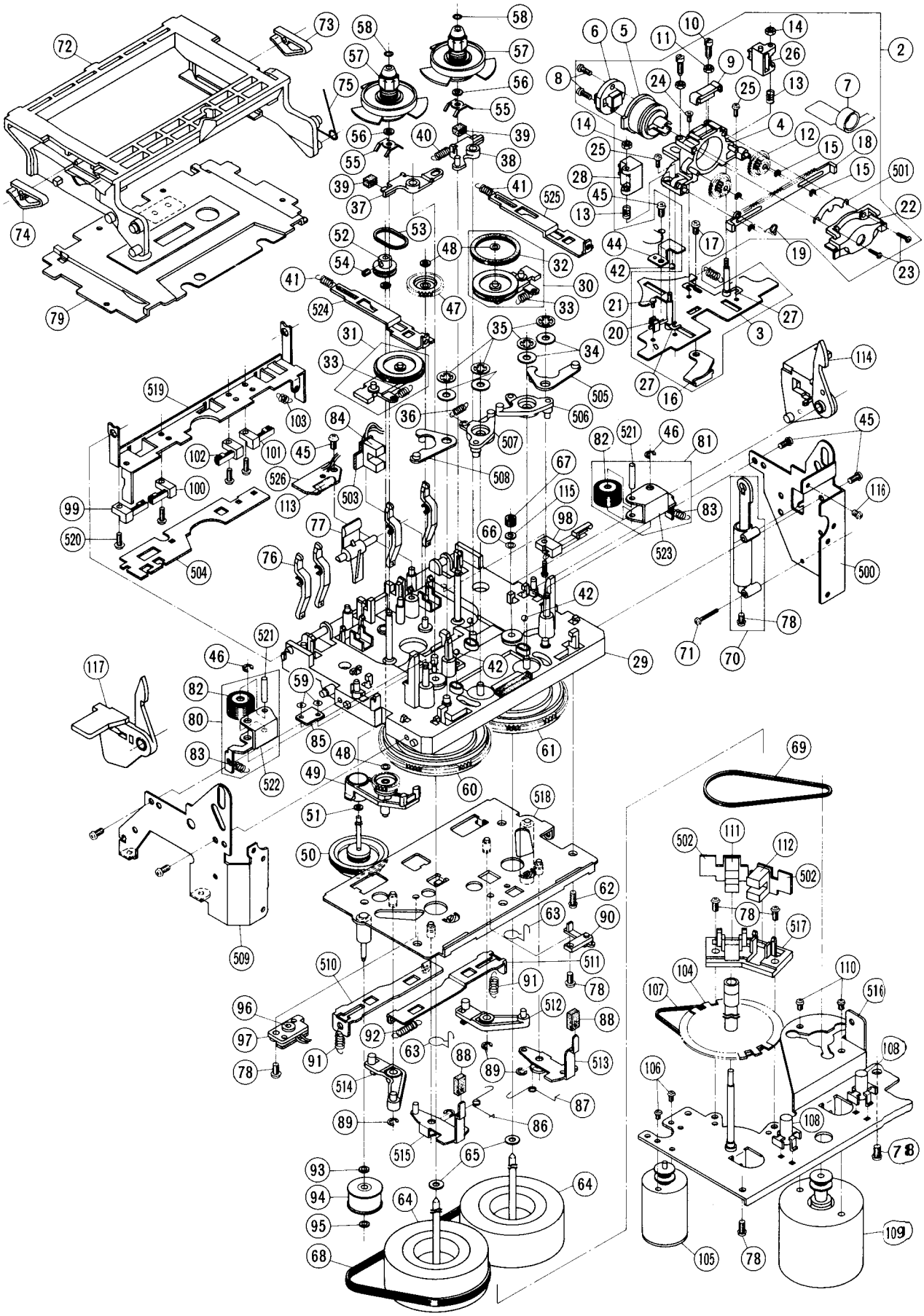

1. MECHA CMR01 BLOCK

REF. NO.	PARTS NO.	DESCRIPTION
1-1	BB-T2045A020B	MECHA CMR01 BLK GX-R6
1-2	BH-T2045A030B	HEAD BLK GX-R6
	HEAD BLOCK	
1-3	MZ-B344008	CHASSIS HEAD PART
1-4	HZ-B344009	HOUSING ROTARY PART
1-5	HZ-B344006	HOLDER ROTARY PART
1-6	HR-H2501A010A	HEAD COMBO EPR4-9
1-7	EA-343944	PC HEAD (B) CMR01A0240
1-8	ZS-245147	CTS20x06STL BNI
1-9	HZ-344011	GUIDE ROTARY HEAD
1-10	ZS-344001	SCREW AZIMUTH
1-11	ZW-273734	N20BRS NI3 1
1-12	MZ-344004	GEAR HEAD
1-13	ZG-344012	SP PUSH GUIDE TAPE
1-14	ZW-618884	N20STL CMT 1
1-15	ZW-391397	RING E120SUP CMT
1-16	MZ-344002	PLATE ADJUST
1-17	ZS-442585	BID26x04STL CMT
1-18	MZ-344007	RACK
1-19	ZG-344013	SP TORSION RACK
1-20	ES-344104	SW LEAF BSW-191 01-1 NO (SW901)
1-21	ZS-343125	BID14x03STL BNI
1-22	HZ-344015	COVER HOUSING
1-23	ZS-345773	BID17x06STL BNI
1-24	ZS-524812	CTS20x04STL CMT
1-25	ZS-608095	PAN20x05STL CMT
1-26	HZ-344093	GUIDE TAPE
1-27	ZW-344639A	SPACER ADJUST (A) 0.10MM
1-27	ZW-344639B	SPACER ADJUST (B) 0.15MM
1-27	ZW-344639C	SPACER ADJUST (C) 0.20MM
1-27	ZW-344639D	SPACER ADJUST (D) 0.25MM
1-27	ZW-344639E	SPACER ADJUST (E) 0.30MM
1-27	ZW-344639F	SPACER ADJUST (F) 0.35MM
1-27	ZW-344639G	SPACER ADJUST (G) 0.40MM
1-27	ZW-344639H	SPACER ADJUST (H) 0.45MM
1-27	ZW-344639J	SPACER ADJUST (I) 0.50MM
1-28	BZ-T2045A040A	GUIDE DETECTION BLK HX-R5
	MECHA CMR01 BLOCK	
1-29	MZ-B344018	CHASSIS MECHA PART
1-30	MI-344094	IDLER PLAY (R) ASSY
1-31	MI-344095	IDLER PLAY (L) ASSY
1-32	MB-345139	WHEEL RUBBER
1-33	ZG-343195	SP PULL IDLER
1-34	ZW-268222	PW31x080x030STL CMT
1-35	ZW-329422	RING CS0300
1-36	ZG-312923	SP T1-3.2/0.2-11.2 T1-040
1-37	ML-344032	LEVER BRAKE (L)
1-38	ML-344033	LEVER BRAKE (R)
1-39	MB-344034	BRAKE RUBBER
1-40	ZG-312925	SP T1-3.2/0.2-14.0 T1-042
1-41	ZG-349016	SP PULL SLIDE
1-42	MV-666887	BALL 250STL
1-43	ZG-343193	SP PULL HEAD CHASSIS RETURN
1-44	MZ-344039	PLATE HEAD HOLD
1-45	ZS-336613	PT PAN26x06STL CMT
1-46	ZW-270088	RING E 190SUP CMT
1-47	MZ-344036	GEAR WIND (B)
1-48	ZW-343120	PW17x040x025PSL
1-49	ML-344096	ARM REWIND ASSY
1-50	TC-344097	WIND ASSY
1-51	ZW-305546	PW21x040x025PSL
1-52	MR-344037	PULLEY WIND
1-53	MB-344043	BELT WIND (B)
1-54	ZS-353047	-SET26x03STL CMT HP
1-55	ZG-344031	SP PLATE BT
1-56	ZW-381644	PW21x040x013PSL
1-57	BR-344098	REEL TABLE (A) ASSY
1-58	ZW-343120	PW17x040x025PSL
1-59	ZW-349046	WASHER FIXATION
1-60	MZ-344019	CAM WHEEL (L)
1-61	MZ-344020	CAM WHEEL (R)
1-62	ZS-336613	PT PAN26x06STL CMT
1-63	ZG-344064	SP PULL EARTH
1-64	BF-344029	FLYWHEEL
1-65	ZW-344047	SPACER FLYWHEEL
1-66	ZW-349047	WASHER OIL STOPPER
1-67	MB-344028	PULLEY RUBBER
1-68	MB-344041	BELT CAPSTAN
1-69	MB-344042	BELT WIND (A)
1-70	MZ-344099	DUMPER ASSY
1-71	ZS-343113	ST PAN20x12STL CMT
1-72	SP-344057	LID CASE
1-73	ZG-336615	SP PLATE CASSETTE HOLDER (B)
1-74	ZG-344939	SP PLATE CASSETTE HOLDER
1-75	ZG-344058A	SP TORSION LID (R)
1-76	ML-344286	LEVER DETECTION (A)
1-77	ML-344053	LEVER DETECTION (B)
1-78	ZS-321194	ST PAN26x05STL CMT
1-79	BD-B344049B	LID DECORATION (B) PART
1-80	BL-T2045A050A	ARM PINCH ROLLER (L) BLK HX-R5
1-81	BL-T2045A060A	ARM PINCH ROLLER (R) BLK HX-R5
1-82	MP-336153	PINCH ROLLER (A)
1-83	ZG-344089	SP PULL PINCH ROLLER
1-84	ET-311977	PHOTO SENSOR SPI-201
1-85	ET-310341	PHOTO SENSOR PT350 T (TR902)
1-86	ZG-345660	SP TORTION RETURN (L)
1-87	ZG-345661	SP TORTION RETURN (R)
1-88	MB-349019	RUBBER ARM RETURN
1-89	ZW-270088	RING E 190SUP CMT
1-90	ES-344101	SW LEAF MD-1003 01-1 NO (SW905)
1-91	ZG-344090	SP PULL DRIVE ARM
1-92	ZG-312945	SP T1-3.2/0.29-14.0 T1-061
1-93	ZW-305546	PW21x040x025PSL
1-94	MR-B344076	PULLEY MIDDLE PART
1-95	ZW-343120	PW17x040x025PSL
1-96	ED-310340	D LED GL350 INFRARED RAY (D902)
1-97	TC-344062	HOLDER STOP SENSOR
1-98	ES-336814	SW LEAF MSW-1150NBK 01-1 NO (SW902)
1-99	ES-344257	SW LEAF MSW-1418L 01-1 NO (SW903)
1-100	ES-344253	SW LEAF MSW-1418J 01-1 NO (SW904)
1-101	ES-344257	SW LEAF MSW-1418L 01-1 NO (SW906)
1-102	ES-344253	SW LEAF MSW-1418J 01-1 NO (SW907)
1-103	ZG-344091	SP PULL HOLDER
1-104	MR-344080	PULLEY CAM SLIT
1-105	MB-B604490	⚠ MOTOR OPERATION (PULLEY) PART (M901)
1-106	ZS-477876	PAN20x03STL CMT
1-107	MB-344088	BELT CAM
1-108	MZ-344083	HOLDER THRUST
1-109	BM-B604491	⚠ MOTOR (PULLEY) PART EG-510ED 2B2 (M902)
1-110	ZS-592378	PAN26x03STL CMT
1-111	ET-344102	PHOTO SENSOR GP-1S04 (PH2)
1-112	ET-344102	PHOTO SENSOR GP-1S04 (PH3)
1-113	EL-348214	PL LEAD 28.0V 24MA
1-114	ML-344055	ARM LOCK (R)
1-115	SZ-349017	FELT CAPSTAN
1-116	ZS-201475	PAN20x03STL NI3
1-117	ML-344056	ARM LOCK (L)
	CONTROL P.C BOARD	
1-118x	ER-333698	⚠ R CB H S15 FS RDS 1/2W 821J (R4)

NOTE: Parts listed in 1 to 118 on the exploded view and list are normaly stocked for replacement purpose.
The remaining parts shown in this manual are not normaly stoked, because they are not seldom required for routine service.

2. PRE AMP AND POWER SUPPLY P.C BOARD BLOCK

REF. NO.	PARTS NO.	DESCRIPTION
2-1U	BA-T2058A020E	PC PRE AMP/POWER BLK GX-R55 (U,J)
2-1C	BA-T2058A020G	PC PRE AMP/POWER BLK (C,A)
2-1E	BA-T2058A020H	PC PRE AMP/POWER BLK (E,B,S)
	PRE AMP P.C BOARD	
2-IC1	EI-349196	IC HA12058
2-IC2	EI-349388	IC M54418P
2-IC4	EI-337228	IC M5218L0
2-IC5	EI-348785	IC M5220L
2-IC6to8	EI-337228	IC M5218L0
2-IC9	EI-348701	IC M51143L
2-TR3	ET-307349	⚠ TR 2SD794 P,Q
2-TR5	ET-328868	TR 2SD1012-V G,H
2-TR6	ET-346298	TR 2SA1246 S,T
2-TR7,9	ET-350795	TR 2SC3399
2-TR10	ET-200558	TR 2SA1115 E,F
2-TR11,13	ET-328868	TR 2SD1012-V G,H
2-TR14	ET-349605	TR 2SA1346
2-TR15	ET-200505	TR 2SC2603 E,F
2-TR16	ET-349605	TR 2SA1346
2-TR17	ET-200505	TR 2SC2603 E,F
2-TR18	ET-328868	TR 2SD1012-V G,H
2-TR19to24	ET-349606	TR 2SC3382 T,U
2-TR27	ET-309353	⚠ TR 2SC2274K E,F
2-TR28,29	ET-309353	TR 2SC2274K E,F
2-TR30	ET-349608	⚠ TR 2SC3383 T,U
2-TR31	ET-328578	⚠ TR 2SC2320 E,F
2-TR32	ET-337968	TR 2SA999 E,F
2-TR33	ET-349592	TR 2SC3400
2-TR34	ET-200505	TR 2SC2603 E,F
2-TR35	ET-328868	⚠ TR 2SD1012-V G,H
2-TR37	ET-352726	TR 2SA1392 T,U
2-D5to7	ED-344280	D SILICON H GMA-01-FY2 F05
2-D8	ED-301911	D SILICON H DS448
2-D9	ED-346440	D ZENER H HZ5FA F10 B1
2-D10	ED-308953	D GERMA H 1K34A-LH S12
2-D11	ED-301911	D SILICON H DS448
2-D12	ED-348062	⚠ D ZENER V HZ15-2S7
2-D13	ED-301911	D SILICON H DS448
2-D14	ED-344280	D SILICON H GMA-01-FY2 F05
2-D15,16	ED-301911	D SILICON H DS448
2-VR1	EV-342939	R S-FIX H H0811C313A 3P 103
2-VR2	EV-345610	R S-FIX H H0811C307A 3P 102
2-VR3	EV-345611	R S-FIX H H0811C358A 3P 502
2-VR4	EV-342939	R S-FIX H H0811C313A 3P 103
2-VR5,6	EV-342942	R S-FIX H H0811C362A 3P 503
2-VR7	EV-336785	R S-FIX H TM8KV2-1S 3P 0.50W 104
2-RL1	EQ-337067	RELAY LEAD LAB3NS 2NO 18V
2-VL1	EO-337055	COIL VARI 1 FE002S 10MH
2-L1	EO-669273	COIL FIX 2 FL5R200 180
2-T1	EO-352104	COIL OSC 1 94-5009-01 100KHZ
2-FL1	EH-351182	FILTER DB 201AK-005 100KHZ
2-FL2	EH-351183	FILTER DB 201AK-006 19KHZ
2-FL3	EO-337044	COIL TUN 1 102AK-005
2-FL4	EO-315758	COIL TUN 1 100Z-431 100.00KHZ
2-C3	EC-347187	C MC V F05 FM 5R0D 500DC
2-C5	EC-200948	C EC V F05 NP SM 1R0M 50DC
2-C35	EC-314992	C STY V F05 CQF09 681J 50DC
2-C36	EC-347205	C MC V F05 FM 220J 500DC
2-C46	EC-306419	C STY V F05 500 681J 50DC
2-C55	EC-347216	C MC V F05 FM 330J 500DC
2-C64	EC-347187	C MC V F05 FM 5R0D 500DC
2-C67	EC-308965	C STY V F05 CQ09S 152J 500DC
2-C71	EC-307684	C EC V F05 NP SM R47M 50DC
2-C72	EC-307167	C EC V F05 LL 100 16.0DC
2-C74	EC-347400	C MC V F05 FE92 680J 500DC
2-C75	EC-347471	C PP V F05 PP 471J 50DC
2-J1	EJ-347664	PIN J YKC21-5053 P 4P
2-J1B	EJ-345812	PHONE J HLJ0527-3714
2-J2B	EJ-344640	PHONE J HLJ4308-3034
	OUTPUT P.C BOARD	
2-VR1C	EV-337841	VR SLIDE 30P2SV0A B103
	POWER SUPPLY P.C BOARD	
2-TR1D	ET-200505	⚠ TR 2SC2603 E,F
2-TR2D	ET-200558	TR 2SA1115 E,F
2-TR3D	ET-309353	⚠ TR 2SC2274K E,F
2-TR4D	ET-310148	⚠ TR 2SD612K E,F
2-TR5D	ET-349081	⚠ TR 2SC3383 S,T
2-TR6D	ET-349979	⚠ TR 2SD794 P,Q,R
2-TR7D	ET-349718	⚠ TR 2SA1392 S,T
2-TR8D	ET-353067	⚠ TR 2SB744 P,Q,R
2-D1D	ED-330319	⚠ D SILICON DBA10B 100/1.0A
2-D2D	ED-349662	⚠ D SILICON DS135E-FA6 100/1.0A
2-D3D	ED-346450	D ZENER H HZ6FA F10 B2
2-D4D	ED-344280	D SILICON H GMA-01-FY2 F05
2-D5D	ED-338092	D ZENER H HZ2FA F10 B1
2-D6D	ED-346454	D ZENER H HZ6FA F10 C3
2-D7D	ED-346454	⚠ D ZENER H HZ6FA F10 C3
2-D8D	ED-330319	⚠ D SILICON DBA10B 100/1.0A
2-D9D,10D	ED-349662	⚠ D SILICON DS135E-FA6 100/1.0A
2-D11D	ED-344280	D SILICON H GMA-01-FY2 F05
2-D12D	ED-346264	⚠ D ZENER V HZ11LS7 F05 B2
2-D13D	ED-349662	⚠ D SILICON DS135E-FA6 100/1.0A
2-D14D	ED-346446	D ZENER H HZ5FA F10 C3
2-D15D	ED-344280	D SILICON H GMA-01-FY2 F05
2-D16D	ED-346264	⚠ D ZENER V HZ11LS7 F05 B2
2-D17D,19D	ED-344280	D SILICON H GMA-01-FY2 F05
2-D20D,21D	ED-301911	D SILICON H DS448
2-SW1D	ES-344270	⚠ SW PUSH SDLD1P 01-1
2-C1D	EC-338396	⚠ C MMY V ECQEW 473M 250AC
	REMOTE P.C BOARD	
2-J2E	EJ-346076	DIN J TCS4690-01-1111 P 8P

3. SYSTEM CONTROL AND METER P.C BOARD BLOCK

REF. NO.	PARTS NO.	DESCRIPTION
3-1	BA-T2058A030C	PC SYSCON/METER BLK GX-R55
3-1B	BA-T2058A030F	PC SYSCON/METER BLK GX-R55-B (BL MOD EL)
	SYSTEM CONTROL P.C BOARD	
3-IC1	EI-349877	IC T2055A
3-IC2,3	EI-337008	IC LC7800
3-IC4	EI-337009	IC LC4049B
3-IC5	EI-345759	IC LC7530
3-IC6	EI-330352	IC BA6109
3-IC7	EI-345765	IC LB1292
3-TR1,2	ET-349592	TR 2SC3400
3-TR3	ET-348950	TR 2SA1345
3-TR4	ET-349592	TR 2SC3400
3-TR5	ET-200505	TR 2SC2603 E,F
3-TR6	ET-200558	TR 2SA1115 E,F
3-TR7,8	ET-200505	TR 2SC2603 E,F
3-TR9	ET-349272	⚠ TR 2SC3242A E,F
3-TR11,12	ET-200505	TR 2SC2603 E,F
3-D1	ED-349662	D SILICON DS135E-FA6 100/1.0A

3-D2	ED-344280	D SILICON H GMA-01-FY2 F05
3-D3	ED-346504	⚠ D ZENER H HZ20FA F10 3
3-D5	ED-338454	D ZENER V HZ9C-2S7
3-D6	ED-349662	D SILICON DS135E-FA6 100/1.0A
3-D7,8	ED-349662	D SILICON DS135E-FA6 100/1.0A (BL MODEL)
3-D9	ED-344280	D SILICON H GMA-01-FY2 F05
3-D13	ED-624903	D SILICON H 1S2473
3-D14	ED-346469	D ZENER H H29FA F10 B2
3-D15	ED-344280	D SILICON H GMA-01-FY2 F05
3-D16	ED-346455	D ZENER H HZ27FA F10 Al
3-VR1	EV-522652	R S-FIX V V8K1-1 3P 105
3-X1	EI-349372	OSC CE CSA4.00MG 4MHZ
3-CR2	EH-349374	COMP R RKC1/8B8 4.7K J
3-CR3	EH-349375	COMP R M3806
3-C5	EC-200983	C STY V F05 500 101K 50DC
3-C14	EC-346299	C EC V CUT LL 102M 16DC

METER P.C BOARD

3-IC1B	EI-337013	IC LB1290
3-IC3B,4B	EI-337845	IC BA6146 M
3-IC5B,6B	EI-343417	IC LB1294
3-TR1B	ET-349592	TR 2SC3400
3-TR2B	ET-349593	TR 2SA1348
3-D1Bto3B	ED-624903	D SILICON H 1S2473
3-SW1Bto8B	ES-349367	SW TACT KHH10906
3-SW9B	ES-349640	SW TACT B3F-1050
3-SW10Bto30B	ES-349367	SW TACT KHH10906
3-SW31B	ES-349698	SW SLIDE 00130333 GRAY 01-3 S (EXCEPT BL MODEL)
3-SW31B	ES-349597	SW SLIDE 00130329 BLACK 01-3 S (BL MODEL)
3-SW32B,33B	ES-347966	SW PUSH ESB-649 01-2-2 N
3-SW34B	ES-347966	SW PUSH ESB-649 01-2-2 N
3-IN1B	EM-349594	IND FL FIP6GM7
3-IN2B	EM-349595	IND FL FIP48AW11YS

ASSEMBLY BLOCK

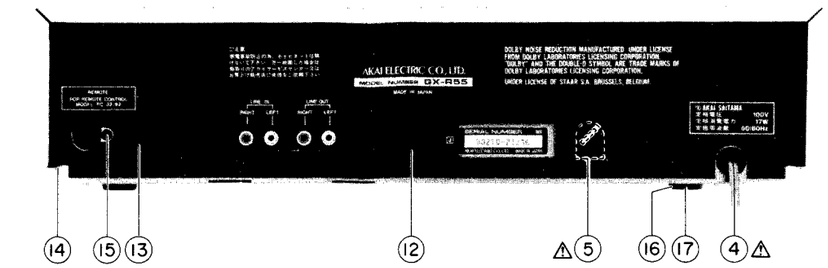

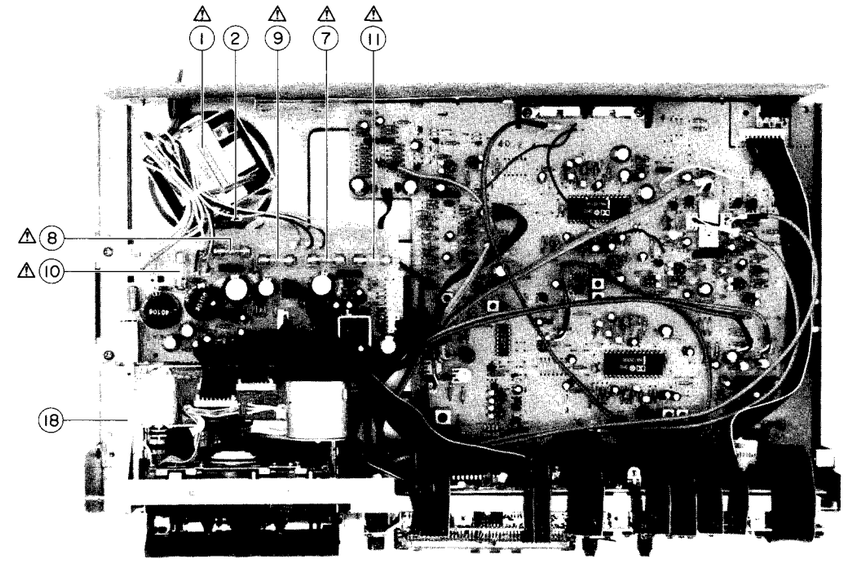

4. ASSEMBLY BLOCK

REF. NO.	PARTS NO.	DESCRIPTION
4-1U	BT-349618	⚠ TRANS POWER T2059(U) (T901)
4-1J	BT-349619	⚠ TRANS POWER T2059(J) (T901)(EXCEPT P MODEL)
4-1C	BT-349620	⚠ TRANS POWER T2059(A,C) (T901)
4-1E	BT-349621	⚠ TRANS POWER T2059(E,V) (T901)
4-1B	BT-349622	⚠ TRANS POWER T2059(B,S) (T901)
4-2	ZS-314702	ST BID40x10STL CMT
4-3x	ZW-413188	N40STL CMT 1
4-4U	EW-347683	⚠ AC CORD 2 CORES VM0129, VFF-CB U/T (U)
4-4J	EW-347836	⚠ AC CORD 2 CORES KP-209 VFF-CB J (J)(EXCEPT P MODEL)
4-4C	EW-348215	⚠ AC CORD 2 CORES KP10, SPT1 105C CB UC(C,A)
4-4E	EW-347682	⚠ AC CORD 2 CORES VM0364, FC3097-CB EV (E)
4-4B	EW-347680	⚠ AC CORD 2 CORES LCFL2x0.75-CB B (B)
4-4S	EW-347681	⚠ AC CORD 2 CORES VM0436, FC3093-CB S (S)
4-5	ES-305733	⚠ SW SELECTOR HXW0131-260 01-4 (U)
4-6x	ZS-348375	ST BR30x08STL CMT (U)
4-7U	EF-327103	⚠ FUSE TSC A 250V 0.50A (F1)(U,J)
4-7C	EF-309390	⚠ FUSE TSC 125V 0.50A (F1)(C,A)
4-7E	EF-668474	⚠ FUSE SEMKO T 250V 0.40A (F1)(E,B,S)
4-8U	EF-327103	⚠ FUSE TSC A 250V 0.50A (F2)(U,J)
4-8C	EF-309390	⚠ FUSE TSC 125V 0.50A (F2)(C,A)
4-8E	EF-593706	⚠ FUSE SEMKO T 250V 0.50A (F2)(E,B,S)
4-9U	EF-306125	⚠ FUSE TSC A 250V 0.31A (F3)(U,J)
4-9C	EF-308848	⚠ FUSE TSC 125V 0.40A (F3)(C,A)
4-9E	EF-339906	⚠ FUSE SEMKO T 250V 0.25A (F3)(E,B,S)
4-10U	EF-309388	⚠ FUSE TSC A 250V 0.80A (F4)(U,J)
4-10C	EF-309391	⚠ FUSE TSC 125V 0.80A (F4) (C,A)
4-10E	EF-593706	⚠ FUSE SEMKO T 250V 0.50A (F4)(E,B,S)
4-11U	EF-327103	⚠ FUSE TSC A 250V 0.50A (F5)(U,J)
4-11C	EF-309390	⚠ FUSE TSC 125V 0.50A (F5) (C,A)
4-11E	EF-668474	⚠ FUSE SEMKO T 250V 0.40A (F5)(E,B,S)
4-12U	SP-351185G	PANEL REAR BOARD GX-R55(U)
4-12J	SP-351185H	PANEL REAR BOARD GX-R55(J) (EXCEPT P MODEL)
4-12C	SP-351185J	PANEL REAR BOARD GX-R55(A,C)
4-12E	SP-351185K	PANEL REAR BOARD GX-R55(E)
4-12B	SP-351185M	PANEL REAR BOARD GX-R55(B,S)
4-13	ZS-352120	T2BR30x08STL BCM C080
4-14	ZS-455207	T2BR30x055TL CMT
4-15	ZW-698308	RV NYL30x055 BL
4-16	SA-349332	FOOT
4-17	ZS-313486	ST PAN30x06STL CMT C
4-18	MZ-349534	JOINT POWER
4-19x	ZW-305013	RV POP32 (A)

FINAL ASSEMBLY BLOCK

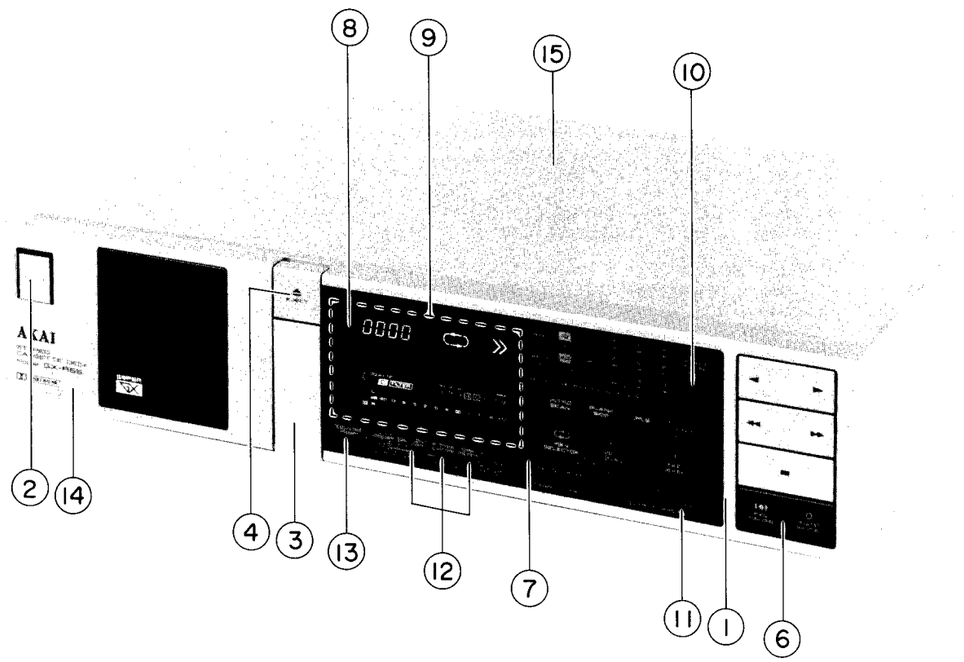

5. FINAL ASSEMBLY BLOCK

REF. NO.	PARTS NO.	DESCRIPTION
5-1	BD-T2058A050D	PANEL FRONT BLK GX-R55
5-1P	BD-T2058A050E	PANEL FRONT BLK GX-R55-P (EXCEPT J MODEL)
5-1B	BD-T2058A050F	PANEL FRONT BLK GX-R55-B
5-2	SK-343017G	KNOB POWER
5-2P	SK-34017B	KNOB POWER-P
5-2B	SK-343017F	KNOB POWER-B
5-3	SP-349517A	PANEL DOOR
5-3P	SP-349517B	PANEL DOOR-P
5-3B	SP-349517C	PANEL DOOR-B
5-4	SK-349513A	KNOB EJECT
5-4P	SK-349513B	KNOB EJECT-P
5-4B	SK-349513C	KNOB EJECT-B
5-5x	ZG-313182	SP C-4.5/0.35-25.0 C-029
5-6	SK-349516G	KNOB OPERATE(D)
5-6B	SK-349516L	KNOB OPERATE(D)-B
5-7	SP-B349524	PANEL TEN KEY(A) PART
5-7B	SP-B349524B	PANEL TEN KEY(A)-2 PART
5-8	SP-349502B	WINDOW METER(2)
5-8B	SP-349520E	WINDOW METER(2)
5-9	SE-353076	WIND FILTER
5-10	SK-349519B	KNOB RANDOM-P
5-10B	SK-349519C	KNOB RANDOM-B
5-11	SK-343009E	KNOB OUTPUT-P2
5-11B	SK-343009C	KNOB OUTPUT-B
5-12	SK-349518A	KNOB DOLBY
5-12B	SK-349518B	KNOB DOLBY-B
5-13	SK-349512A	KNOB RESET
5-13B	SK-349512B	KNOB RESET-B
5-14	BD-B349521C	LID PANEL(2) PART
5-14P	BD-B349521D	LID PANEL(2)-P PART
5-14B	BD-B349521N	LID PANEL(2)-B PART
5-15	SP-344591A	COVER UPPER
5-15P	SP-344591B	COVER UPPER P
5-15B	SP-344591D	COVER UPPER-B-(2)

SYMBOL FOR COLOR VARIATION

S – SILVER
P – PEARL SHADOW
B or BL – BLACK

INDEX

PARTS NO.	REF. NO.
BA-T2058A020E	2-1U
BA-T2058A020G	2-1C
BA-T2058A020H	2-1E
BA-T2058A030C	3-1
BA-T2058A030F	3-1B
BB-T2045A020B	1-1
BD-B344049B	1-79
BD-B349521C	5-14
BD-B349521D	5-14P
BD-B349521N	5-14B
BD-T2058A050D	5-1
BD-T2058A050E	5-1P
BD-T2058A050F	5-1B
BF-344029	1-64
BH-T2045A030B	1-2
BL-T2045A050A	1-80
BL-T2045A060A	1-81
BM-B604490	1-105
BM-B604491	1-109
BR-344098	1-57
BY-349618	4-10
BT-349619	4-1J
BT-349620	4-1C
BT-349621	4-1E
BT-349622	4-1B
BZ-T2045A040A	1-28
EA-343944	1-7
EC-200948	2-C5
EC-200983	3-C5
EC-306419	2-C46
EC-307167	2-C72
EC-307684	2-C71
EC-308965	2-C67
EC-314992	2-C35
EC-338396	2-C1D
EC-346299	3-C14
EC-347187	2-C3
EC-347187	2-C64
EC-347205	2-C36
EC-347216	2-C55
EC-347400	2-C74
EC-347471	2-C75
ED-301911	2-D8
ED-301911	2-D11
ED-301911	2-D13
ED-301911	2-D15
ED-301911	2-D16
ED-301911	2-D20D
ED-301911	2-D21D
ED-308953	2-D10
ED-310340	1-96
ED-330319	2-D1D
ED-330319	2-D8D
ED-338092	2-D5D
ED-338454	3-D5
ED-344280	2-D6
ED-344280	2-D7
ED-344280	2-D5
ED-344280	2-D14
ED-344280	2-D4D
ED-344280	2-D11D
ED-344280	2-D17D
ED-344280	2-D18D
ED-344280	2-D19D
ED-344280	2-D15D
ED-344280	3-D2
ED-344280	3-D9
ED-344280	3-D15
ED-346264	2-D12D
ED-346264	2-D16D
ED-346440	2-D9
ED-346446	2-D14D
ED-346450	2-D3D
ED-346454	2-D6D
ED-346454	2-D7D
ED-346455	3-D16
ED-346469	3-D14
ED-346504	3-D3
ED-348062	2-D12
ED-349662	2-D2D
ED-349662	2-D9D
ED-349662	2-D10D
ED-349662	2-D13D
ED-349662	3-D1
ED-349662	3-D6
ED-349662	3-D7
ED-349662	3-D8
ED-624903	3-D13
ED-624903	3-D1B
ED-624903	3-D2B
ED-624903	3-D3B
EF-306125	4-9U
EF-308848	4-9C
EF-309388	4-10U
EF-309390	4-7C
EF-309390	4-8C
EF-309390	4-11C
EF-309391	4-10C
EF-327103	4-7U
EF-327103	4-8U
EF-327103	4-11U
EF-339906	4-9E
EF-593706	4-8E
EF-593706	4-10E
EF-668474	4-7E
EF-668474	4-11E
EH-349374	3-CR2
EH-349375	3-CR3
EH-351182	2-FL1
EH-351183	2-FL2
EI-330352	3-IC6
EI-337008	3-IC2
EI-337008	3-IC3
EI-337009	3-IC4
EI-337013	3-IC1B
EI-337228	2-IC4
EI-337228	2-IC6
EI-337228	2-IC7
EI-337228	2-IC8
EI-337845	3-IC3B
EI-337845	3-IC4B
EI-343417	3-IC5B
EI-343417	3-IC6B
EI-345759	3-IC5
EI-345765	3-IC7
EI-348701	2-IC9
EI-348785	2-IC5
EI-349196	2-IC1
EI-349372	3-X1
EI-349388	2-IC2
EI-349877	3-IC1
EJ-344640	2-J2B
EJ-345812	2-J1B
EJ-346076	2-J2E
EJ-347664	2-J1
EL-348214	1-113
EM-349594	3-IN1B
EM-349595	3-IN2B
EO-315758	2-FL4
EO-337044	2-FL3
EO-337055	2-VL1
EO-352104	2-T1
EO-669273	2-L1
EQ-337067	2-RL1
ER-333698	1-118x
ES-305733	4-5
ES-336814	1-98
ES-344101	1-90
ES-344104	1-20
ES-344253	1-100
ES-344253	1-102
ES-344257	1-99
ES-344257	1-101
ES-344270	2-SW1D
ES-347966	3-SW33B
ES-347966	3-SW34B
ES-347966	3-SW32B
ES-349367	3-SW1B
ES-349367	3-SW2B
ES-349367	3-SW3B
ES-349367	3-SW4B
ES-349367	3-SW5B
ES-349367	3-SW6B
ES-349367	3-SW7B
ES-349367	3-SW8B
ES-349367	3-SW10B
ES-349367	3-SW11B
ES-349367	3-SW12B
ES-349367	3-SW13B
ES-349367	3-SW14B
ES-349367	3-SW15B
ES-349367	3-SW16B
ES-349367	3-SW17B
ES-349367	3-SW18B
ES-349367	3-SW19B
ES-349367	3-SW20B
ES-349367	3-SW21B
ES-349367	3-SW22B
ES-349367	3-SW23B
ES-349367	3-SW24B
ES-349367	3-SW25B
ES-349367	3-SW26B
ES-349367	3-SW27B
ES-349367	3-SW28B
ES-349367	3-SW29B
ES-349367	3-SW30B
ES-349597	3-SW31B
ES-349640	3-SW9B
ES-349698	3-SW31B
ET-200505	2-TR15
ET-200505	2-TR17
ET-200505	2-TR34
ET-200505	2-TR1D
ET-200505	3-TR7
ET-200505	3-TR8
ET-200505	3-TR11
ET-200505	3-TR12
ET-200505	3-TR5
ET-200558	2-TR10
ET-200558	2-TR2D
ET-200558	3-TR6
ET-307349	2-TR3
ET-309353	2-TR27
ET-309353	2-TR28
ET-309353	2-TR29
ET-309353	2-TR3D
ET-310148	2-TR4D
ET-310341	1-85
ET-311977	1-84
ET-328578	2-TR31
ET-328868	2-TR5
ET-328868	2-TR11
ET-328868	2-TR13
ET-328868	2-TR18
ET-328868	2-TR35
ET-337968	2-TR32
ET-344102	1-111
ET-344102	1-112
ET-346298	2-TR6
ET-348950	3-TR3
ET-349081	2-TR5D
ET-349272	3-TR9
ET-349592	2-TR33
ET-349592	3-TR1B
ET-349592	3-TR1
ET-349592	3-TR2
ET-349592	3-TR4
ET-349593	3-TR2B
ET-349605	2-TR14
ET-349605	2-TR16
ET-349606	2-TR19
ET-349606	2-TR21
ET-349606	2-TR22
ET-349606	2-TR23
ET-349606	2-TR24
ET-349606	2-TR20
ET-349608	2-TR30
ET-349718	2-TR7D
ET-349979	2-TR6D
ET-350795	2-TR7
ET-350795	2-TR9
ET-352726	2-TR37
ET-353067	2-TR8D
EV-336785	2-VR7
EV-337841	2-VR1C
EV-342939	2-VR1
EV-342939	2-VR4
EV-342942	2-VR5
EV-342942	2-VR6
EV-345610	2-VR2
EV-345611	2-VR3
EV-522652	3-VR1
EW-347680	4-4B
EW-347681	4-4S
EW-347682	4-4E
EW-347683	4-4U
EW-347836	4-4J
EW-348215	4-4C
HR-H2501A010A	1-6
HZ-B344006	1-5
HZ-B344009	1-4
HZ-344011	1-9
HZ-344015	1-22
HZ-344093	1-26
MB-344028	1-67
MB-344034	1-39
MB-344041	1-68
MB-344042	1-69
MB-344043	1-53
MB-344088	1-107
MB-345139	1-32
MB-349019	1-88
MI-344094	1-30
MI-344095	1-31
ML-344032	1-37
ML-344033	1-38
ML-344053	1-77
ML-344055	1-114
ML-344056	1-117
ML-344096	1-49
ML-344286	1-76
MP-336153	1-82
MR-B344076	1-94
MR-344037	1-52
MR-344080	1-104
MV-666887	1-42
MZ-B344008	1-3
MZ-B344018	1-29
MZ-344002	1-16
MZ-344004	1-12
MZ-344007	1-18
MZ-344019	1-60
MZ-344020	1-61
MZ-344036	1-47
MZ-344039	1-44
MZ-344083	1-108
MZ-344099	1-70
MZ-349534	4-18
SA-349332	4-16
SP-351185H	4-12J
SE-353076	5-9
SK-343009C	5-11B
SK-343009E	5-11
SK-343017B	5-2P
SK-343017F	5-2B
SK-343017G	5-2
SK-349512A	5-13
SK-349512B	5-13B
SK-349513A	5-4
SK-349513B	5-4P
SK-349513C	5-4B
SK-349516G	5-6
SK-349516L	5-6B
SK-349518A	5-12
SK-349518B	5-12B
SK-349519B	5-10
SK-349519C	5-10B
SP-B349524	5-7
SP-B349524B	5-7B
SP-344057	1-72

INDEX

PARTS NO.	REF. NO.	PARTS NO.	REF. NO.	PARTS NO.	REF. NO.	PARTS NO.	REF. NO.
SP-344591A	5-15	ZW-618884	1-14				
SP-344591B	5-15P	ZW-698308	4-15				
SP-344591D	5-15B						
SP-349517A	5-3						
SP-349517B	5-3P						
SP-349517C	5-3B						
SP-349520B	5-8						
SP-349520E	5-8B						
SP-351185G	4-12U						
SP-351185J	4-12C						
SP-351185K	4-12E						
SP-351185M	4-12B						
SZ-349017	1-115						
TC-344062	1-97						
TC-344097	1-50						
ZG-312923	1-36						
ZG-312925	1-40						
ZG-312945	1-92						
ZG-313182	5-5x						
ZG-336615	1-73						
ZG-343193	1-43						
ZG-343195	1-33						
ZG-344012	1-13						
ZG-344013	1-19						
ZG-344031	1-55						
ZG-344058A	1-75						
ZG-344064	1-63						
ZG-344089	1-83						
ZG-344090	1-91						
ZG-344091	1-103						
ZG-344939	1-74						
ZG-345660	1-86						
ZG-345661	1-87						
ZG-349016	1-41						
ZS-201475	1-116						
ZS-245147	1-8						
ZS-313486	4-17						
ZS-314702	4-2						
ZS-321194	1-78						
ZS-336613	1-62						
ZS-336613	1-45						
ZS-343113	1-71						
ZS-343125	1-21						
ZS-344001	1-10						
ZS-345773	1-23						
ZS-348375	4-6x						
ZS-352120	4-13						
ZS-353047	1-54						
ZS-442585	1-17						
ZS-455207	4-14						
ZS-477876	1-106						
ZS-524812	1-24						
ZS-592378	1-110						
ZS-608095	1-25						
ZW-268222	1-34						
ZW-270088	1-89						
ZW-270088	1-46						
ZW-273734	1-11						
ZW-305013	4-19x						
ZW-305546	1-93						
ZW-305546	1-51						
ZW-329422	1-35						
ZW-343120	1-58						
ZW-343120	1-95						
ZW-343120	1-48						
ZW-344047	1-65						
ZW-344639A	1-27						
ZW-344639B	1-27						
ZW-344639C	1-27						
ZW-344639D	1-27						
ZW-344639E	1-27						
ZW-344639F	1-27						
ZW-344639G	1-27						
ZW-344639H	1-27						
ZW-344639J	1-27						
ZW-349046	1-59						
ZW-349047	1-66						
ZW-381644	1-56						
ZW-391297	1-15						
ZW-413188	4-3x						

AKAI

MODEL GX-R55

P.C BOARDS
SCHEMATIC DIAGRAM

BA6109

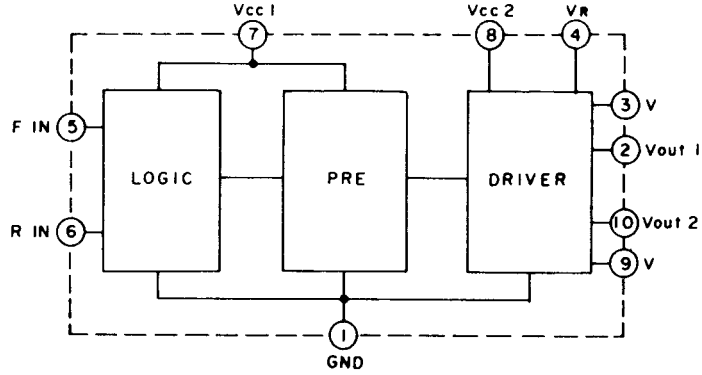

BA6146

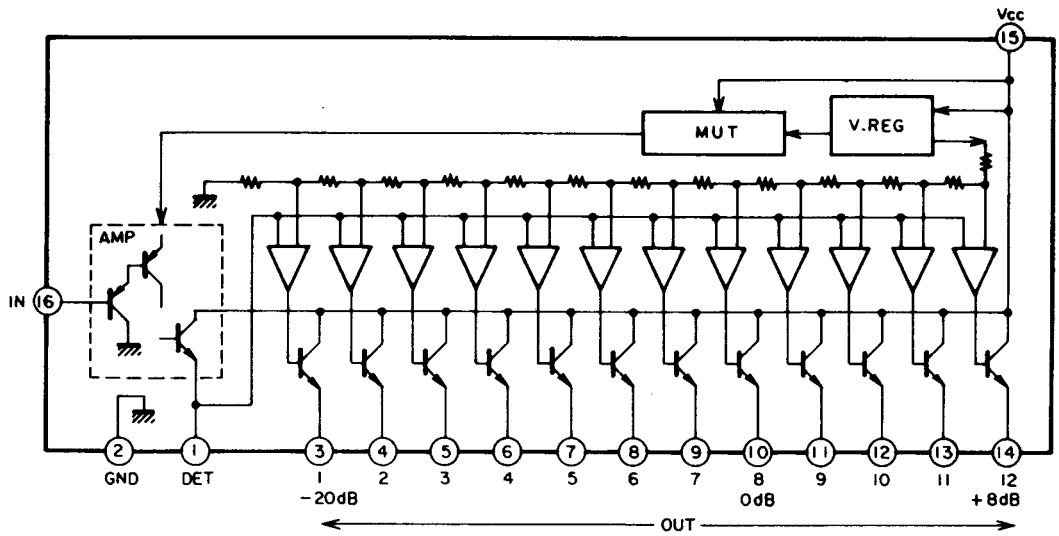

LC7530

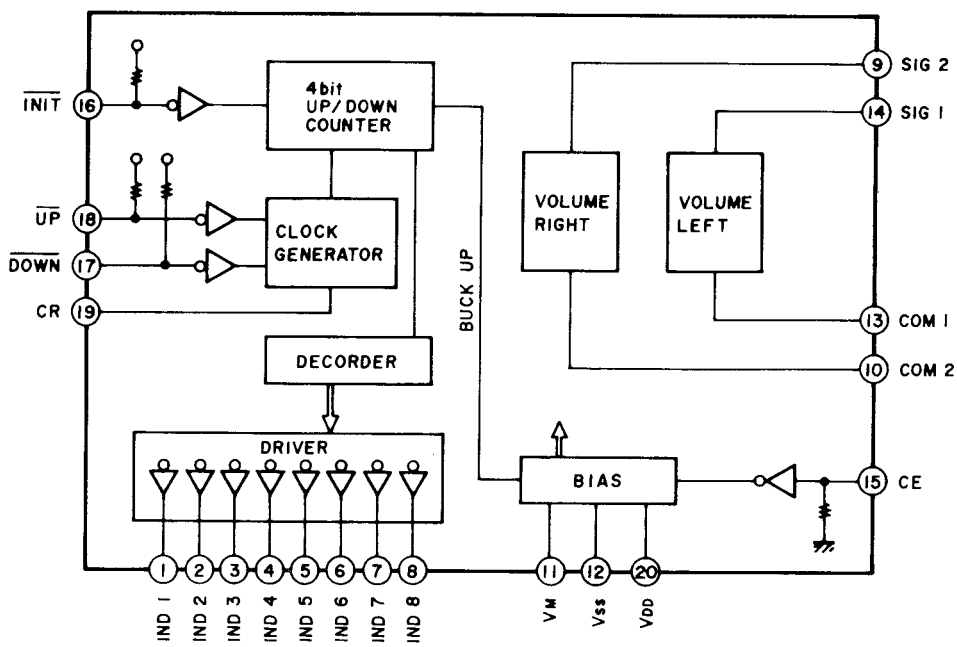

LC7800

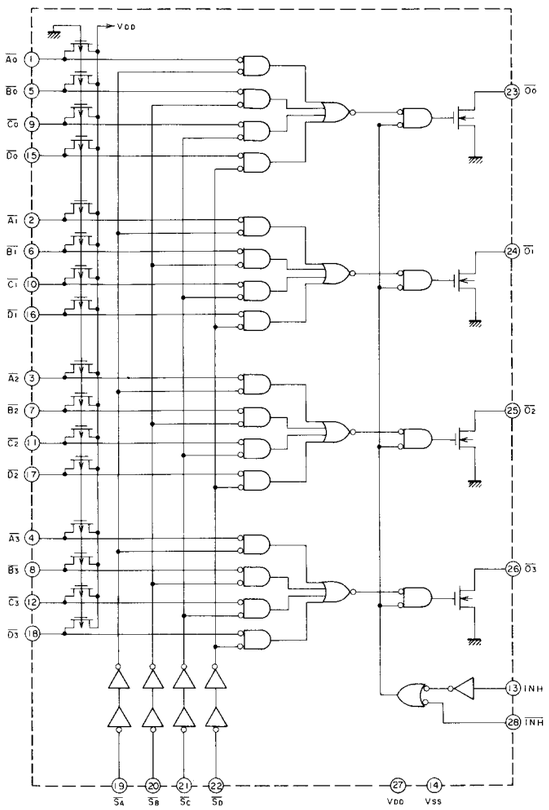

M51143L

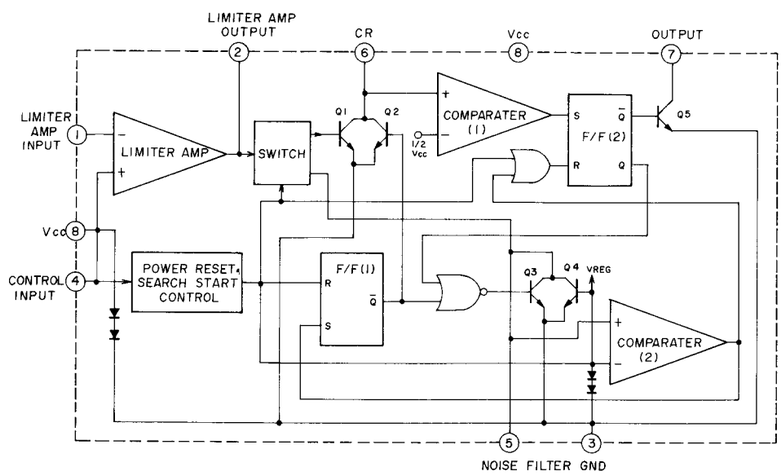

T2055A

Pin No.	Symbol	Description
1	R40	REC MUTE } Output, activated at "H"
2	R41	P. B MUTE }
3	R42	REC/PB Control, "H"→PB, "L"→REC
4	R43	OSC Control output, activates at "L"
5	R50	Forward } Cam Motor Control Output
6	R51	Reverse }
7	R52	IPLS FLD Drive output, Lights at "L"
8	R53	COMMON BUS Output Not used
9	R60	} Electronic Counter Digit Drive Output
10	R61	
11	R62	
12	R64	
13	R70	} STROBE for input port select } "H" at inhibit
14	R71	
15	R72	INHIBIT
16	R73	FLD Drive output, Lights at "L"
17	P10	FWD } FLD Drive output, Light at "H"
18	P11	REV
19	P12	REC
20	P13	R. PLAY
21	V_{SS}	GND
22	P20	ONCE REV } FLD Drive output, Light at "H"
23	P21	CONTI. REV
24	P22	INTRO
25	P23	BSP
26	K00	} DATA input
27	K01	
28	K02	
29	K03	
30	TEST	GND
31	XTAL	Ceramic OSC input
32	EXTAL	Ceramic OSC output
33	$\overline{RESET}$	Reset
34	V_{HH}	+5V
35	R80	Counter Pulse
36	R81	CAM Motor Pulse
37	R82	COMMON BUS input Not used
38	R83	CAM MOTOR direction detector input
39	R90	IPLS Signal detector input "H" at No signal parts
40	R91	TEST ENABLE
41	R92	CAM MODE Stop Detector input "L" at stop mode
42	V_{DD}	+5V

R50	0	1	1
R51	1	0	1
	RWD	REV	STOP

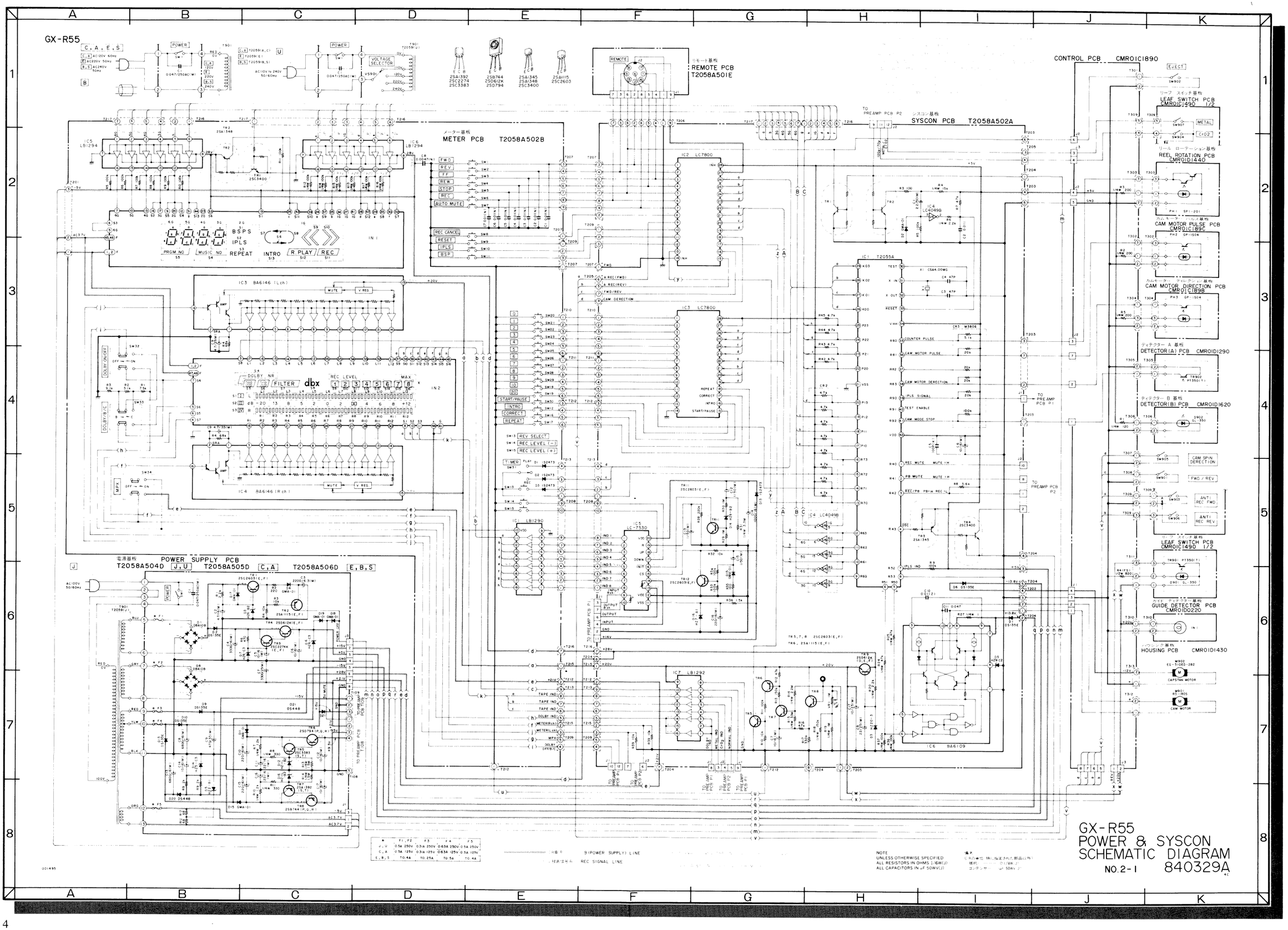
GX-R55
POWER SUPPLY PCB
T2058A504D J,U T2058A505D C,A T2058A506D E,B,S
METER PCB T2058A502B
REMOTE PCB T2058A501E
SYSCON PCB T2058A502A
CONTROL PCB CMR01C1890
LEAF SWITCH PCB CMR01C1490 1/2
REEL ROTATION PCB CMR01D1440
CAM MOTOR PULSE PCB CMR01C189C
CAM MOTOR DIRECTION PCB CMR01C189B
DETECTOR(A) PCB CMR01D1290
DETECTOR(B) PCB CMR01D1620
LEAF SWITCH PCB CMR01C1490 1/2
GUIDE DETECTOR PCB CMR01D0220
HOUSING PCB CMR01D1430
GX-R55
POWER & SYSCON
SCHEMATIC DIAGRAM
NO.2-1
840329A
NOTE
UNLESS OTHERWISE SPECIFIED
ALL RESISTORS IN OHMS 1/6W(J)
ALL CAPACITORS IN μF 50WV(J)

メーター基板
METER PCB
T2058A502B

TR1----2SC3400
TR2----2SA1348

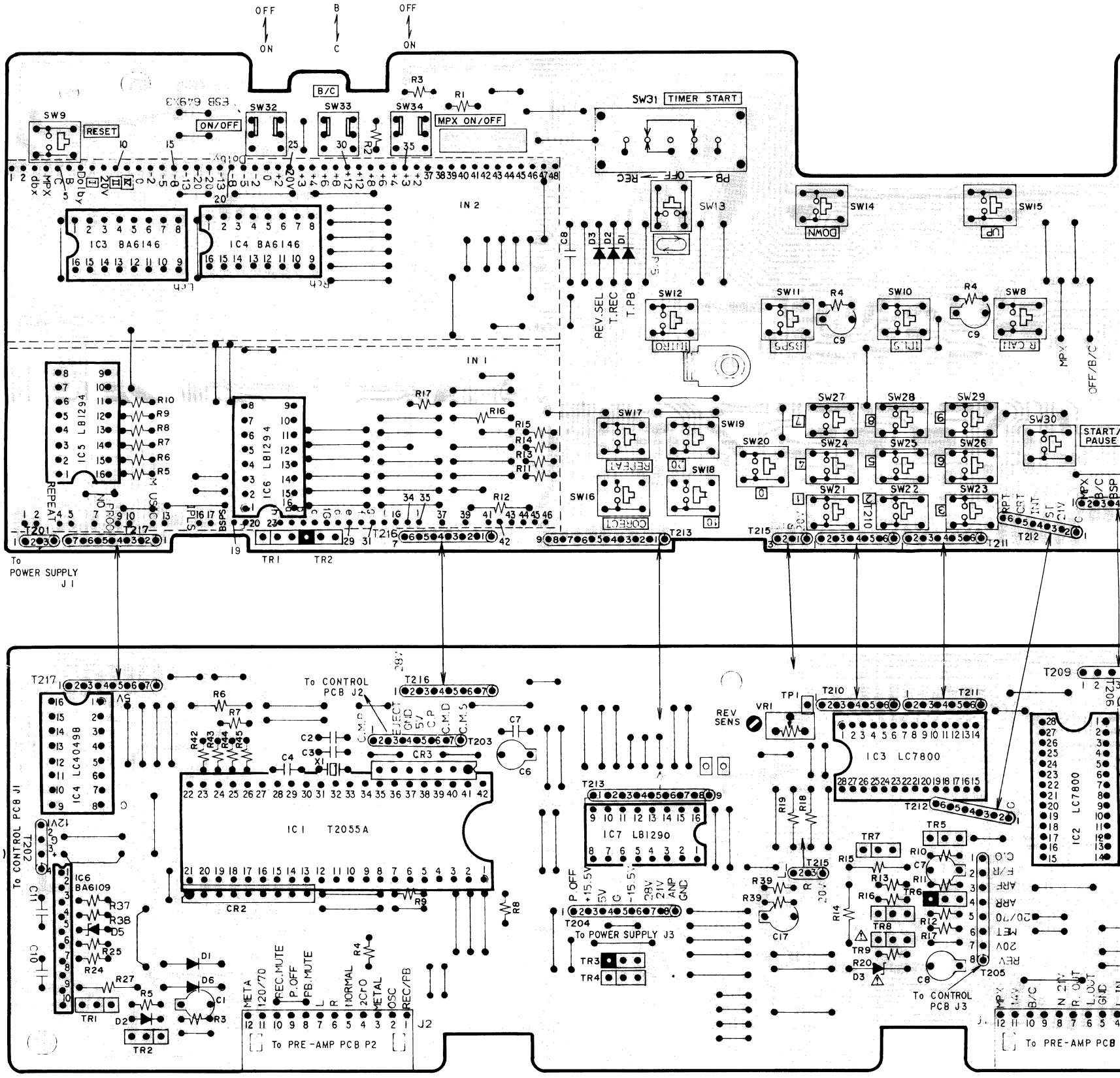

システム コントロール基板
SYSTEM CONTOROL PCB
T2058A502A

TR1,2,4------2SC3400
TR3---------2SA1345
TR5,7,8,11,12----2SC2603(E,F)
TR6---------2SA1115(E,F)
TR9---------2SD612K(D,E,F)

B
=PNP TRANSISTOR
B
=NPN TRANSISTOR

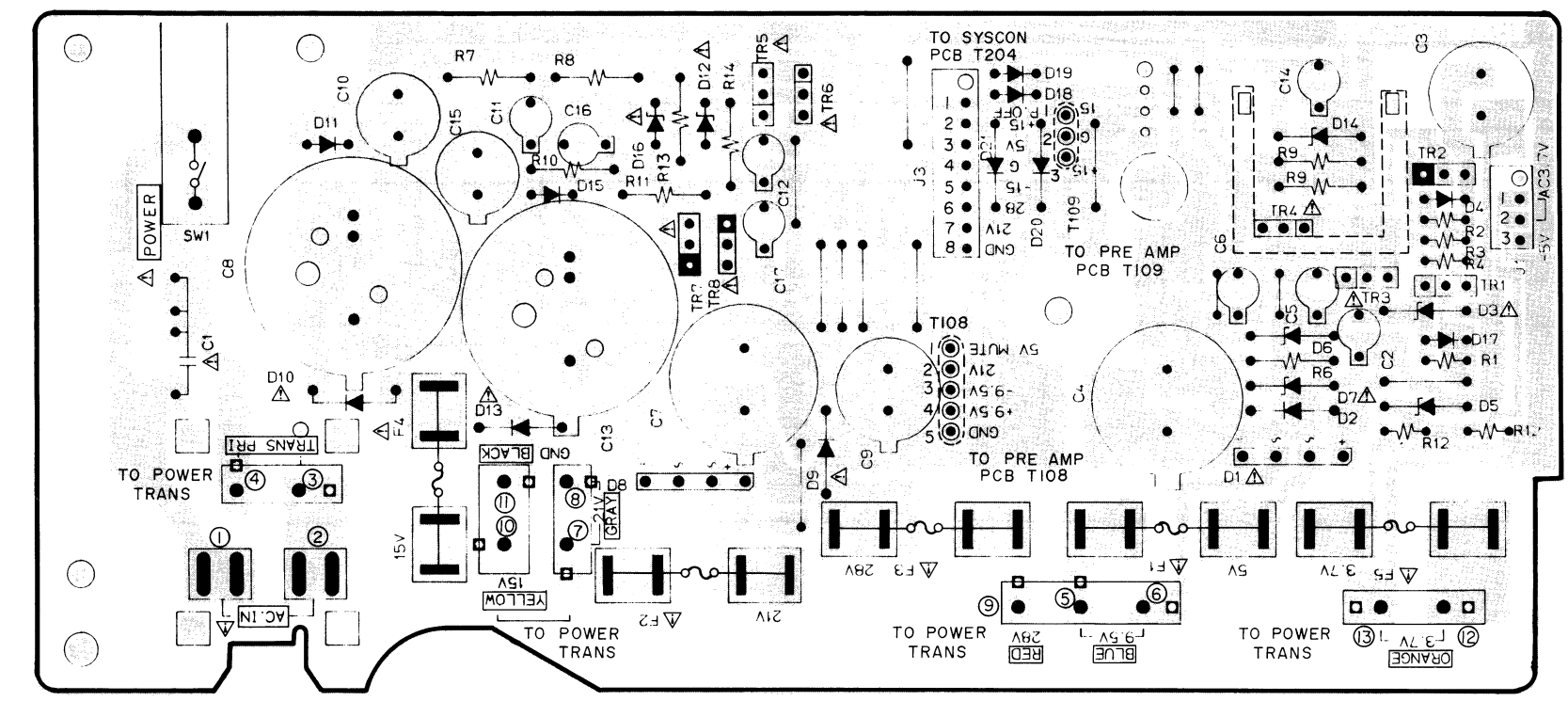

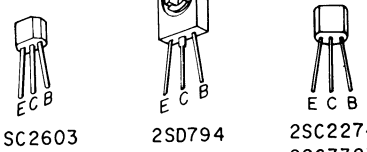

2SC2603
2SA1115

2SD794
2SB744

2SC2274
2SC3383
2SA1392

※	F1,F2	F3	F4	F5
J,U	500mA 250V	310mA 250V	630mA 250V	500mA 250V
C,A	500mA 125V	310mA 125V	630mA 125V	500mA 250V
E,B,S	T400mA	T250mA	T500mA	T400mA

B
=PNP TRANSISTOR
B
=NPN TRANSISTOR

TR1-----2SC2603
TR2-----2SA1115
TR3,4----2SC2274
TR5-----2SC3383
TR6-----2SD794
TR7-----2SA1392
TR8-----2SB744

電源基板
POWER SUPPLY PCB
T2058A504D J,U
505D C,A
506D E,B,S

注意：⚠の付された部品は、安全上重要部品です 交換の際は、指定部品以外は使用しないこと.

WARNING: ⚠ INDICATES SAFETY CRITICAL COMPONENTS.
FOR CONTINUED SAFETY, REPLACE SAFETY CRITICAL COMPONENTS ONLY WITH MANUFACTURER'S RECOMMENDED PARTS.

AVERTISSEMENT: ⚠ IL INDIQU LES COMPOSANTS CRITIQUES DE SURETE POUR MAINTENIR LE DEGRE DE SECURITE DE L'APPAREIL NE REMPLACER LES COMPOSANTS DONT LE FONCTIONNEMENT EST CRITIQUE POUR LA SECURITE QUE PAR DES PIECES RECOMMANDEES PAR LE FABRICANT.

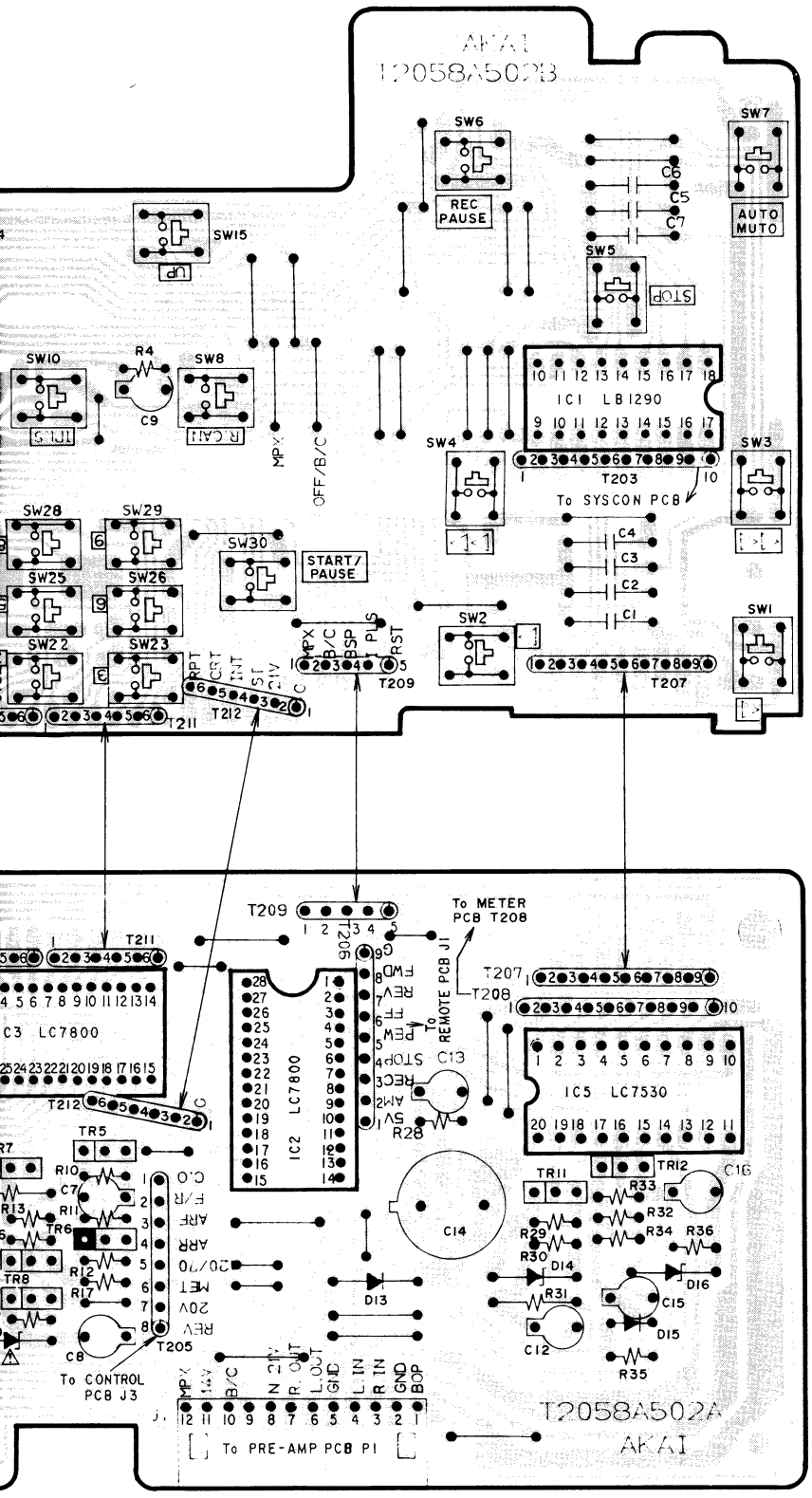

CR2 4.7K x 8

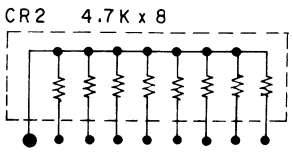

CR3

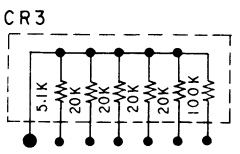

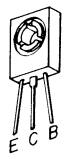

2SD612K

2SA1345
2SA1348
2SC3400

2SA1115
2SC2603

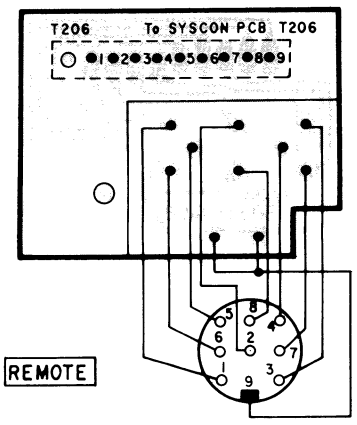

リモート基板
REMOTE PCB
T2058A504E J,U
505E C,A
506E E,B,S

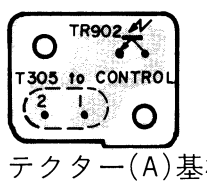

ディテクター(A)基板
DETECTOR(A) PCB
CMR01D1290

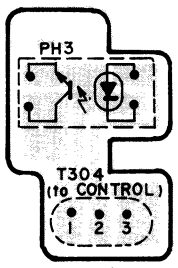

カムディレクション基板
COM DIRECTION PCB
CMR01C189B

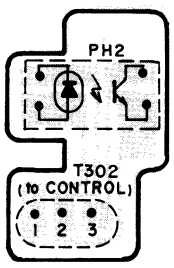

カムモーターパルス基板
CAM MOTOR PULSE PCB
CMR01C189C

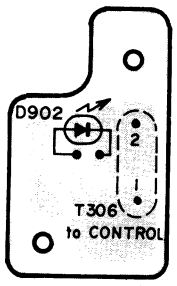

ディテクター(B)基板
DETECTOR(B) PCB
CMR01D1620

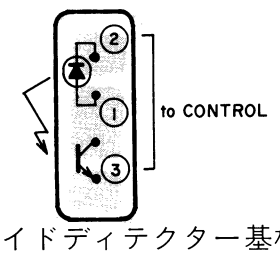

ガイドディテクター基板
GUIDE DETECTOR
PCB CMR01D0220

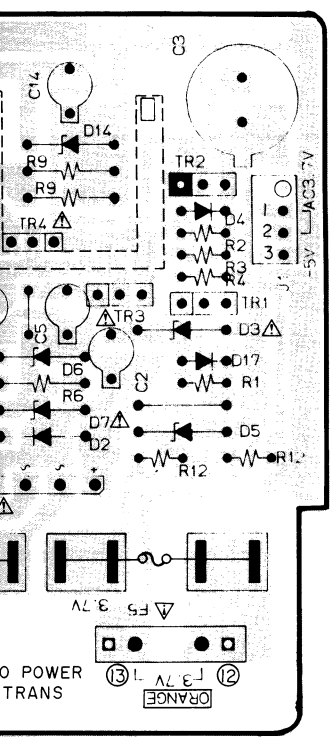

電源基板
POWER SUPPLY PCB
T2058A504D J,U
505D C,A
506D E,B,S

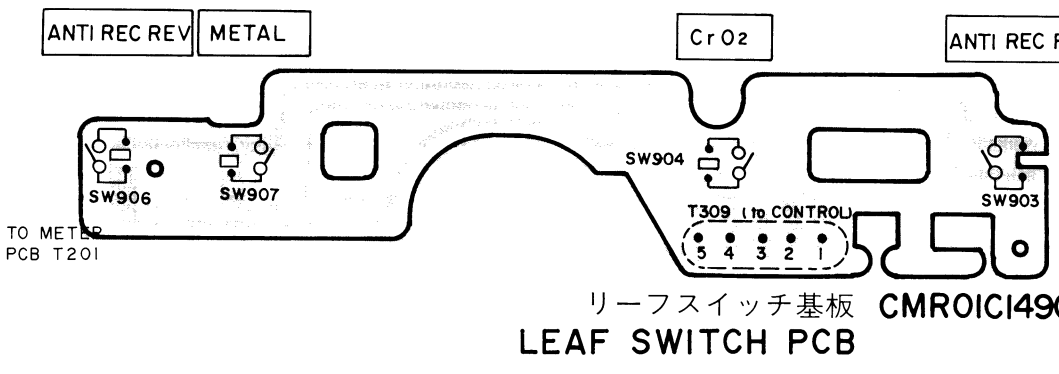

リーフスイッチ基板 CMR01C1490
LEAF SWITCH PCB

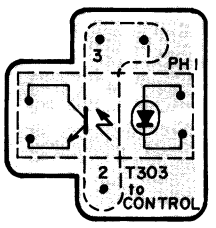

リールローテーション基板
REEL ROTATION
PCB CMR01D1440

コントロール基板
CONTROL PCB CMR01C189A

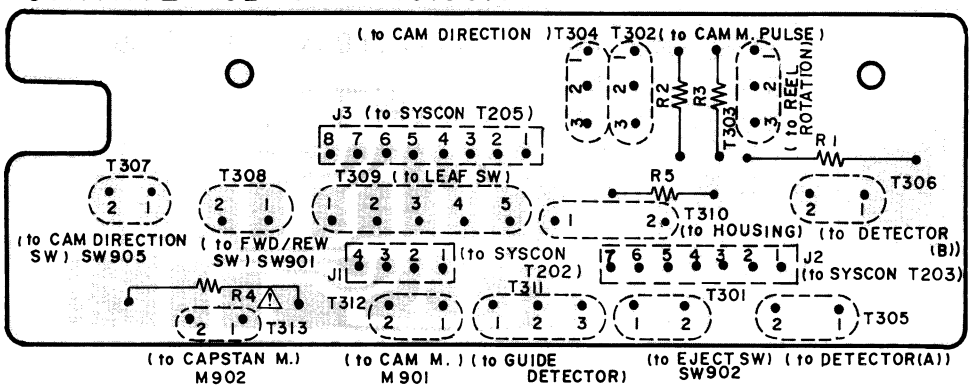

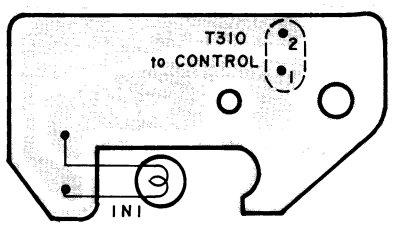

ハウジング基板
HOUSING PCB
CMR01D1430

GX-R55

ジャック基板
JACK PCB 1/3

J U	;T2058A504B
C A	;T2058A505B
E S B	;T2058A506B

IC1 ; HA12058

IC4 ; M5218LO

IC5 ; M5220L

TR19 ; 2SC3382(T,U)

IC9 ; M51143L

IC8

IC2 ; M54418P

TR18 2SD1012-V (G,H)

TR22 2SC3382(T,U)

TR21 TR20 2SC3382(T,U)x2

TR24 2SC3382 (T,U)

TR23 2SC3382 (T,U)

TR33 2SC3400

TR14 ; 2SA1346
TR15 ; 2SC2603(E,F)
TR16 ; 2SA1346
TR27 ; 2SC2274K(E,F)

TR35 2SD1012-V(G,H)

TR17 2SC2603 (E,F)

FL1 201AK-005

FL2 201AK-006

FL3 102AK-005

D9 HZ5FA

D8 DS448

MIC L

MIC R

LINE IN

LINE OUT

REC/PB HEAD

HD425804RVJ

フレキシブル基板
FLEXIBLE PCB 1/2
CMR01A0240

BOP (IPLS)	1
GND	2
IN PUT R	3
IN PUT L	4
NC	5
OUTPUT L	6
OUTPUT R	7
DOLBY IND	8
NC	9
DOLBY OFF B/C	10
+14V	11
MPX	12

TO SYS-CON PCB J1 P1

VR2; METAL FREQ. RESPONSE
VR3, CrO2 FREQ. RESPONSE

IC1 ; HA12058

ジャック基板
JACK PCB 1/3

注意 ! の付された部品は 安全上重要部品です 交換の際は 指定部品以外は使用しないこと

WARNING ! INDICATES SAFETY CRITICAL COMPONENTS.
FOR CONTINUED SAFETY, REPLACE SAFETY CRITICAL COMPONENTS
ONLY WITH MANUFACTURER'S RECOMMENDED PARTS.

2SA1115
2SC3399
2SC3400

2SD794

2SA999
2SA1246
2SA1392
2SC2274K
2SC2320
2SC3382
2SC3383

2SA1346
2SC2603
2SD1012-V

プリ アンプ基板
PRE AMP PCB

J U	;T2058A504A
C A	;T2058A505A
E S B	;T2058A506A

NOTE

備考

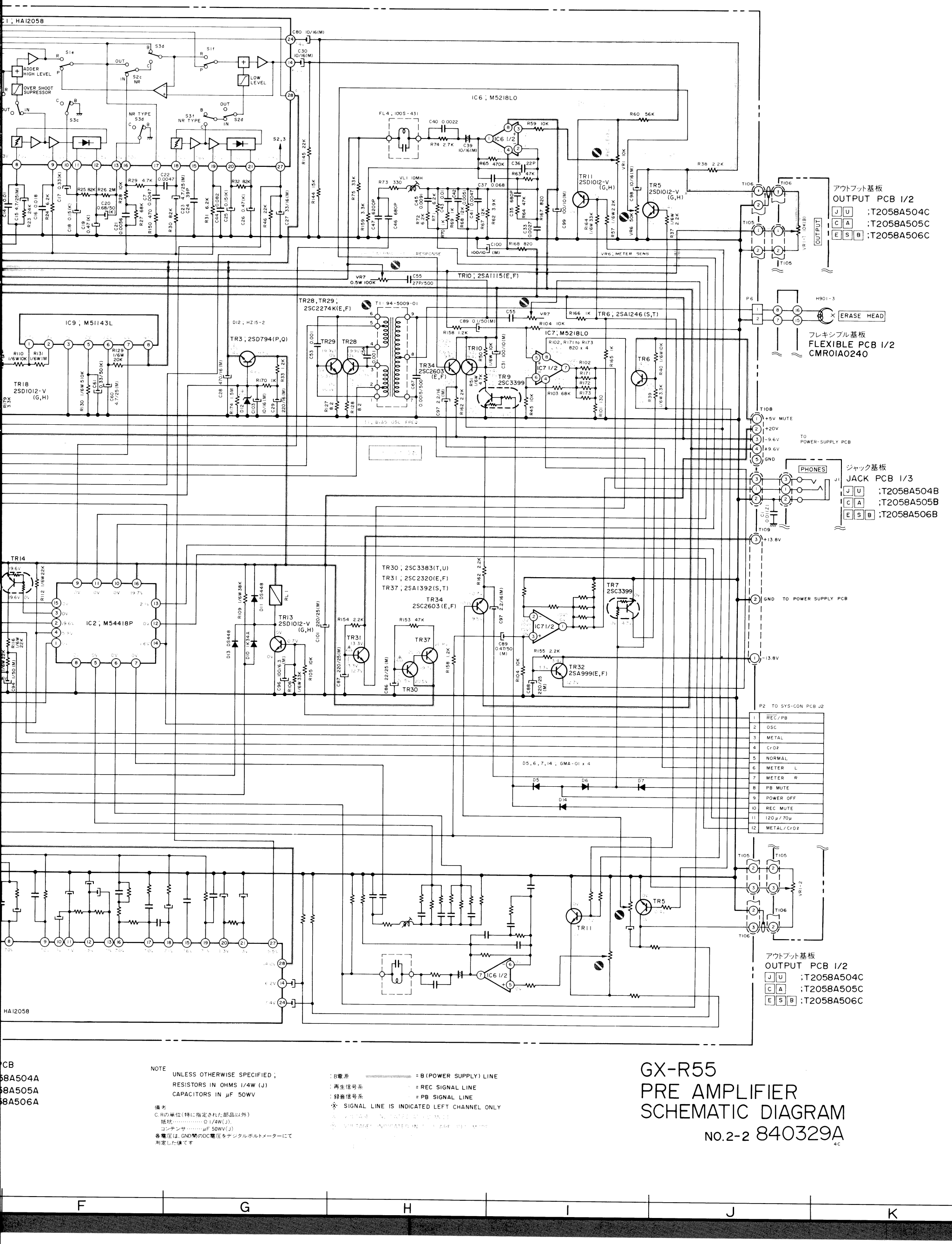

NOTE

UNLESS OTHERWISE SPECIFIED ;
RESISTORS IN OHMS 1/4W (J)
CAPACITORS IN μF 50WV

備考
C.Rの単位(特に指定された部品以外)
抵抗……Ω 1/4W(J).
コンデンサ……μF 50WV(J)
各電圧は、GND間のDC電圧をデジタルボルトメーターにて測定した値です

: B電源 = B (POWER SUPPLY) LINE
: 再生信号系 = REC SIGNAL LINE
: 録音信号系 = PB SIGNAL LINE
SIGNAL LINE IS INDICATED LEFT CHANNEL ONLY

GX-R55
PRE AMPLIFIER
SCHEMATIC DIAGRAM
NO.2-2 840329A
4C

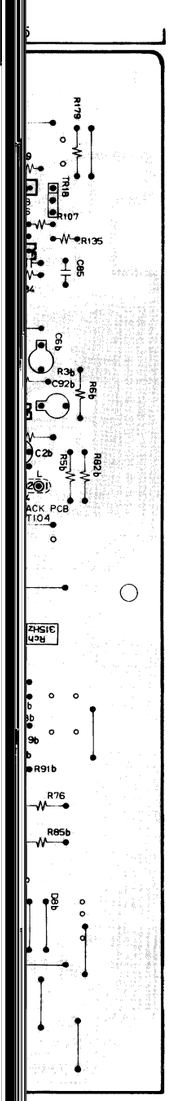

板
PCB
04A J,U
05A C,A
06A E,B,S

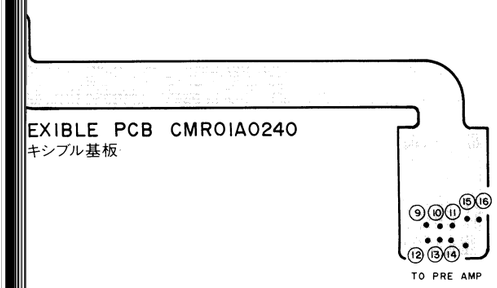

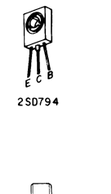

2SD794

2SC3399
2SA1115
2SC3400

2SA1246
2SC3382
2SC2274K
2SC3383
2SC2320
2SA999
2SA1392

2SD1012-V
2SA1346
2SC2603

B
: PNP TRANSISTOR

B
: NPN TRANSISTOR

LOCATION OF COMPONENTS

IC'S	TR'S
IC1----B3,C3	TR3----D4
IC2----B2	TR5----A3,B2
IC4----B5	TR6----C2
IC5----C4	TR7----B2
IC6----D1	TR9----D1
IC7----D1	TR10---D1
IC8----A5	TR11---D1,2
IC9----A5	TR13---D4
	TR14---A2
CONNECTORS	TR15---A2
	TR16---B2
P1----A4	TR17---A2
P2----A2	TR18---A5
P6----B1	TR19---C4,C5
P7----C4	TR20---A4,C3
P7b---C5	TR21---A4,C3
T102---D1	TR22---A3,A4
T103---B5	TR23---C4,C5
T104---B5	TR24---C4,C5
T105---D2	TR27---B2
T106---B3	TR28---A1
T108---C2	TR29---A1
T109---D1	TR30---C2
	TR31---D1
	TR32---D1
	TR33---A2
	TR34---A3
	TR35---B2
	TR37---C2

TR3----------2SD794(P,Q)
TR5,11,13,18,35-----2SD1012-V(G,H)
TR6----------2SA1246(S,T)
TR7,9----------2SC3399
TR10---------2SA1115(E,F)
TR14,16--------2SA1346
TR15,17,34-----2SC2603(E,F)
TR19 to 24-----2SC3382(T,U)
TR27 to 29-----2SC2274K(E,F)
TR30 ---------2SC3383(T,U)
TR31---------2SC2320(E,F)
TR32---------2SA999(E,F)
TR33---------2SC3400
TR37---------2SA1392(S,T)

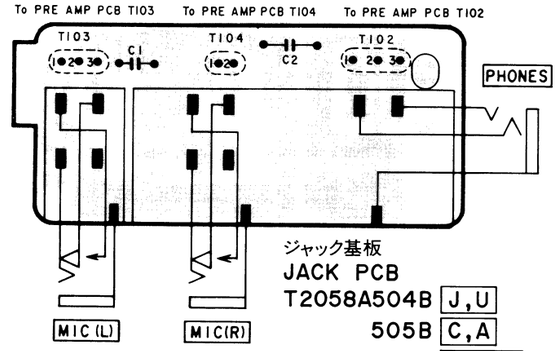

ジャック基板
JACK PCB
T2058A504B J,U
505B C,A
506B E,B,S

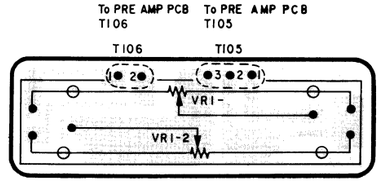

アウトプット基板
OUTPUT PCB
T2058A504C J,U
505C C,A
506C E,B,S

DOLBY C "ON" REC MODE（ドルビーC録音）

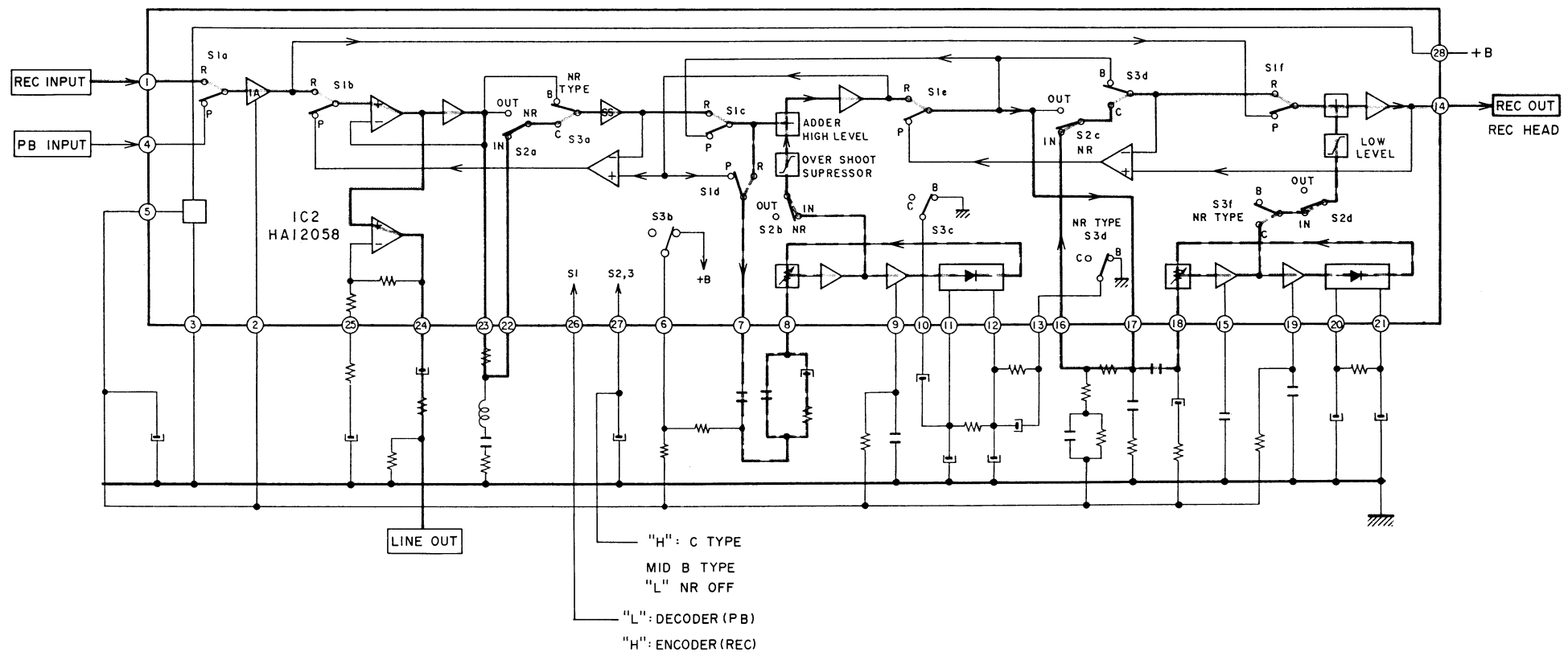

DOLBY C P.B MODE（ドルビーC再生）

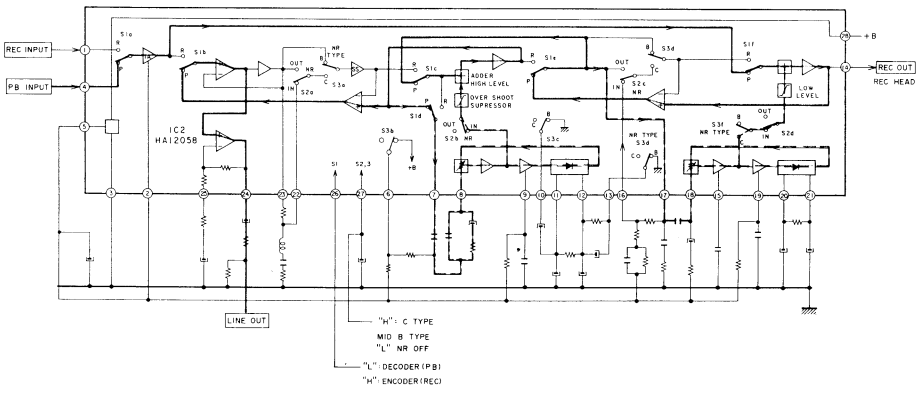

DOLBY B REC MODE（ドルビーB録音）

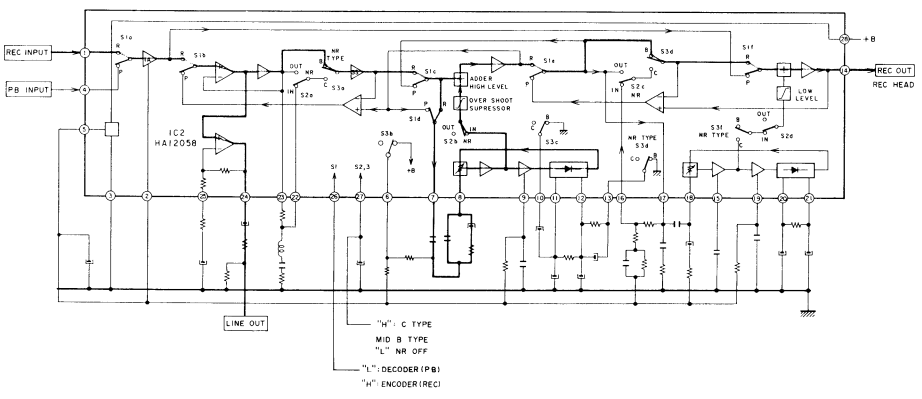

DOLBY B P.B MODE（ドルビーB再生）

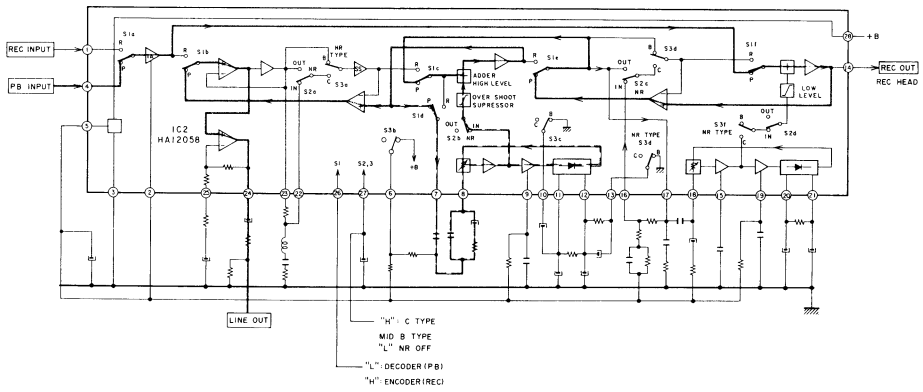

DOLBY "OFF" REC MODE（ドルビーOFF録音）

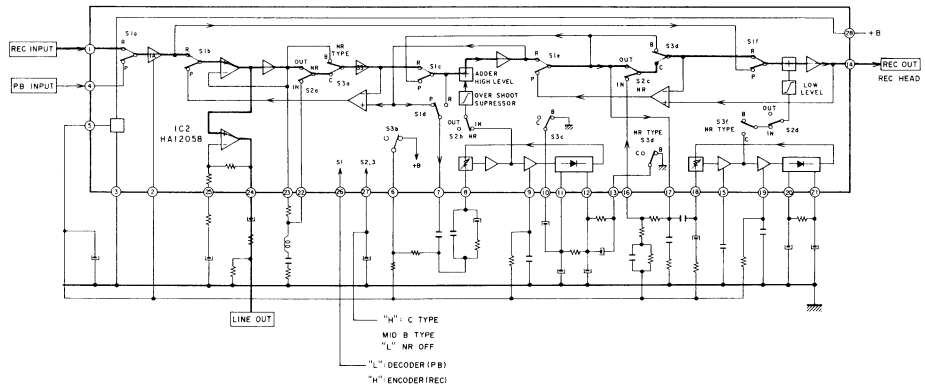

DOLBY "OFF" P.B MODE（ドルビーOFF再生）

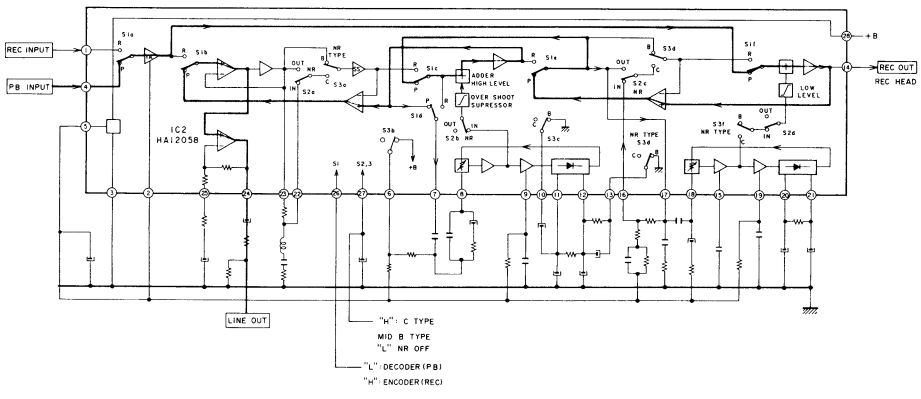

DOLBY IC (HA12038 HA12058)

SIGNAL LINE